Low Voltage

EasyPact EZC

Moulded-case circuit breakers
from 15 to 630 A

Catalog
2016

Life Is On | Schneider Electric

LVED212091EN.indb 1 16-4-13 下午4:10

So easy, so simple

With just three sizes of circuit breakers, Schneider Electric's EasyPact™ EZC system is the simple, universal solution to fit all low-voltage protection needs.

> The fixed version is particularly adapted to the OEM and Building markets, offering optimum performance at a competitive price.

> The plug-in version offers an additional function dedicated to the Marine market.

Buildings

Marine

OEM

CPB100607-001

EasyPact™ EZC range complies with worldwide standards :

- IEC 60947-2
- EN 60947-2
- JISC8201-2-1/C8201-2-2 (annex 1 and 2)
- GB 14048.2
- NEMA-AB1
- UL508 (1)
- CSA22-2 (1)
- IACS for Merchant Marine

(International Association of Classification Societies: ABS, BV, CCS, DNV, GL, KRS, LR, NK, RINA)**

(1) *Only for the 100A and 250A models*

With international certifications and approvals by independent laboratories:

ASEFA, KEMA, TILVA, TÜV, UL

And compliance to RoHS Directive

(Restriction of Hazardous Substances)

Easy choice for total simplicity

So easy, so simple

Easy to choose

EasyPact™ EZC brings you easy solutions

> From 15 A to 630 A
> Up to 50 kA at 415 V
> Up to 4 poles
> In only three frame sizes
> With a complete range of auxiliaries: rotary commands, auxiliaries, shunt trip, phase barrier, terminal cover, undervoltage trip

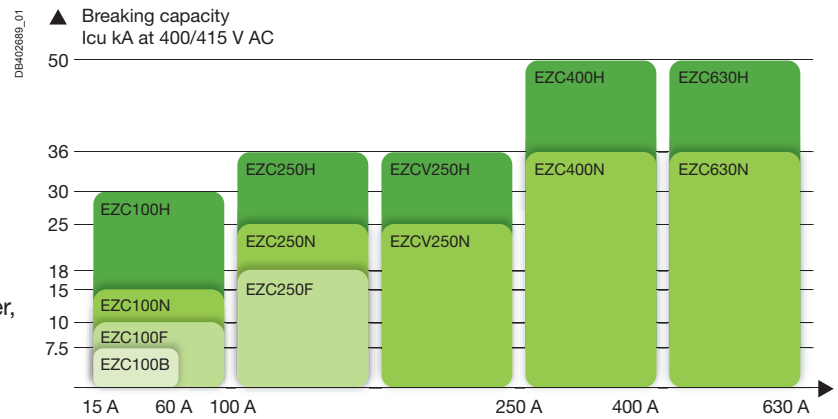

Easy to install

> Fixed front mounting
> Plug-in mounting
> Front connections
> Bare cables connected through cable lugs, screwed inside the breaker
> Field-installable auxiliaries and accessories
> Built-in earth-leakage protection
> Interchangeable MCCB and ELCB

EasyPact™ EZC 250 ELCB

Built-in Integrated Earth-Leakage Circuit Breaker (ECLB) function
- fully interchangeable with MCCB
- same MCCB foot print and panel cut

Easy to use

> A thermal calibration suitable for MCCB use at 50 °C without derating (up to 250A)
> Positive contact indication for safety and reliability
> A smaller case optimized for tight spaces

EasyPact™ EZC: Build your complete solution with Schneider Electric

Timely delivery, wherever you are

Schneider Electric offers a world-renowned logistics network capable of getting EasyPact™ EZC products to you fast, wherever you are.

LVED212091EN.indb 2 16-4-13 下午4:10

Accessories

PB104903

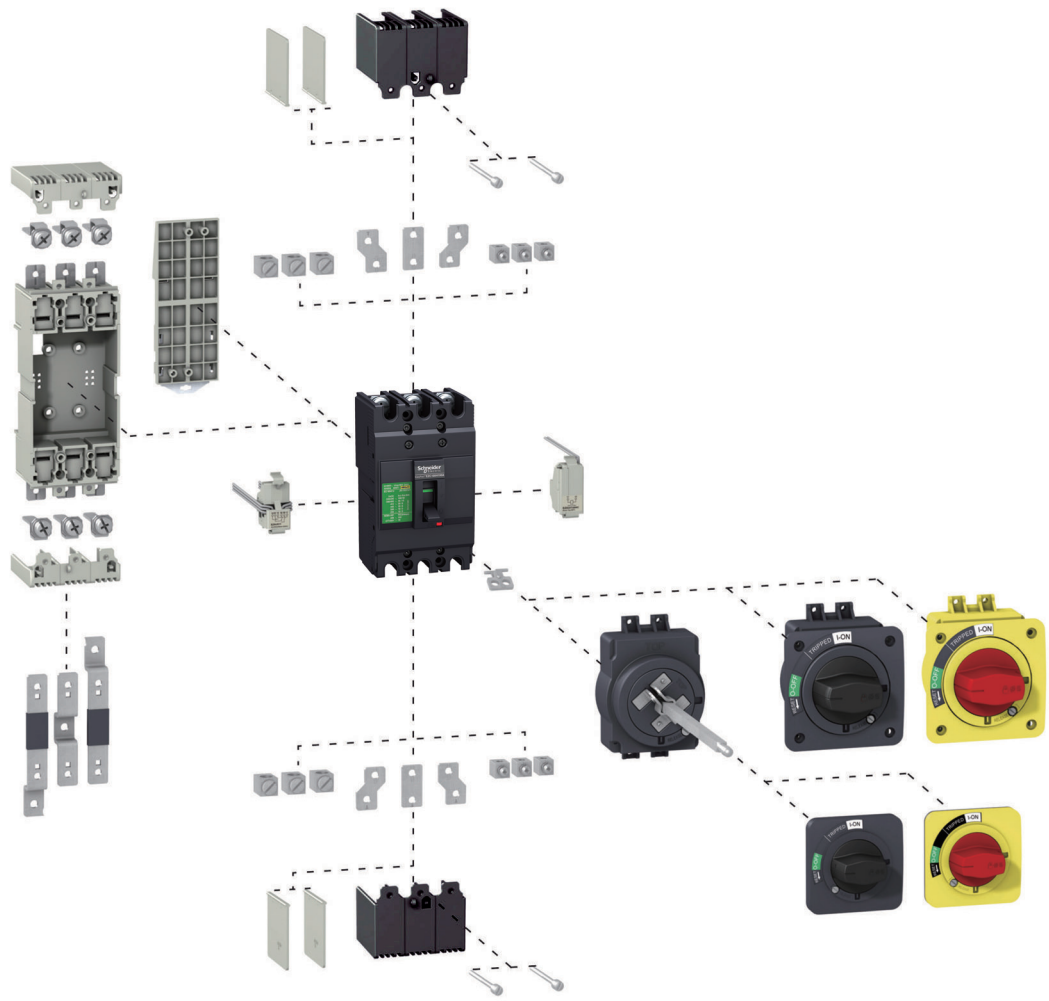

The new **plug-in accessory** reduces installation and maintenance time.

CPB100609

The **fishbone**, designed for vertical installation, saves space and reduces cabling time.

CPB100610

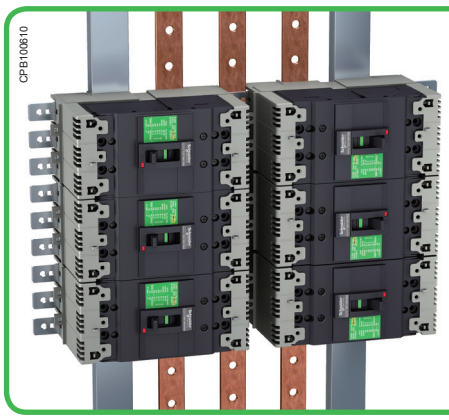

Make the most of your energy™

LVED212091EN.indb 3 16-4-13 下午4:11

Green Premium, stamping the most eco-friendly products of the industry

Green Premium™
Product

Green Premium is the only label allowing you to develop effectively an environmental policy and to promote it, while preserving your business efficiency.

It guarantees compliance with the most up-to-date environmental regulations, but it is more than this.

With Green Premium eco-mark, Schneider Electric helps you:

- Calculate the carbon footprint of the solutions you offer
- Ensure full regulation compliance about substances and chemical components
- Deliver all appropriate information to certify eco-design of your solutions
- Easily manage products end of life, while ensuring optimized recycling.

With Green Premium, Schneider Electric commits to be transparent disclosing extensive and reliable information on environmental impacts of its products:

RoHS

Schneider Electric applies RoHS requirements to all its products and worldwide, even for the numerous ones which are not in the scope of the regulation. Compliance certificates are available for all products involved.

REACh

Schneider Electric applies REACh regulation worldwide, and releases all information about presence of Substances of Very High-Concern (SVHC) in its products.

PEP: Product Environmental Profile

For all its products, Schneider Electric publishes the most complete set of environmental data, including carbon footprint and energy consumption for each of the life cycle phases, in compliance with ISO 14025 PEPecopassport program.

EoLI: End of Life Instructions

Available at a click, these documents provide:

- Recyclability rates of the products
- Information to mitigate personnel hazards during dismantling and before recycling operations
- Parts identification either for re-use, or for selective treatment to mitigate environmental hazards, or incompatibility with usual recycling process.

Discover what we mean by green ....
and
CHECK a PRODUCT!

General contents

Functions and characteristics A-1

Busbars B-1

Installation guide C-1

Catalogue numbers D-1

LVED212091EN.indb 5 16-4-13 下午4:11

Functions and characteristics

Presentation *II*

General characteristics **A-2**

Selection table **A-6**

Electrical and mechanical accessories overview
EasyPact EZC100 A-10
EasyPact EZC250 A-11
EasyPact EZCV250 A-12
EasyPact EZC400-630 A-13

Electrical auxiliaries 100-250AF
AX - AL - AXAL - ALV A-14
SHT - UVR - UVRN A-16

Direct rotary handle 100-250AF **A-18**

Extended rotary handle 100-250AF **A-19**

Plug-in
100 A A-20
Insulation of live parts A-21
250 A A-22
Insulation of live parts A-23

Power connections and cable lugs 100-250AF **A-24**

Power connections and insulation of live parts 100-250AF **A-25**

DIN rail adaptor, padlocking, sealing screws 100-250AF **A-26**

Accessories and auxiliaries of EZC400-630
Connection of devices A-27
Selection of auxiliaries A-29
Indication contacts A-30
Remote tripping A-31
Rotary handles escutcheons and protection collars A-32
Locks and sealing accessories A-33

Busbars *B-1*
Installation guide *C-1*
Catalogue numbers *D-1*

LVED212091EN.indb 1 16-4-13 下午4:11

General characteristics

CDB500611

CDB500612

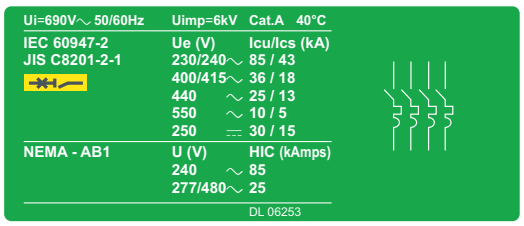

Standardised characteristics indicated on the rating plate:

Ui:	*rated insulation voltage*
Uimp:	*rated impulse withstand voltage*
Ue:	*rated operational voltage*
Icu:	*ultimate breaking capacity, for various values of the rated operational voltage Ue*
Cat:	*utilisation category*
Ics:	*service breaking capacity*
In:	*rated current*
	suitability for isolation

Compliance with standards

EasyPact EZC circuit breakers and auxiliaries comply with the following international standards:
- IEC 60947-1 - general rules
- IEC 60947-2 - low-voltage switchgear and controlgear, part 2 (circuit breakers)
- European (EN 60947-1 and EN 60947-2) and the corresponding national standards
- GB 14048.2
- JIS C8201-2-1 Annex 1 and Annex 2, for molded case circuit breakers
- JIS C8201-2-2 Annex 1 and Annex 2, for earth-leakage circuit breakers
- NEMA-AB1 (High Interrupting Capacity): American standard
- UL 60947-4-1(old UL508)/CSA 22-2 no. 14.

Approvals and Certifications

- IEC certification by independent laboratories (ASEFA, KEMA, TÜV)
- CE marking
- certified by third party Tilva
- UL 60947-4-1(old UL508) certified by third party Underwriter Laboratories as a “Manual Motor Controller” (EZC100/EZC250/EZCV250).

Vibration and shock withstand test

EasyPact EZC circuit breakers resist mechanical vibrations and shocks.
Tests are carried out in compliance with standard IEC 60068-2-6 for the levels required by merchant-marine inspection organisation IACS:
International Association of Classification Societies up to 250 A (ABS, BV, DNV, LR, KRS, RINA, NK):
- 2 to 13.2 Hz: amplitude ± 1 mm
- 13.2 to 100 Hz: acceleraton 0.7 g.

Pollution degree

EasyPact EZC circuit breakers are certified for operation in pollution-degree III environments as defined by IEC standard 60947 (industrial environments).

Tropicalisation

EasyPact EZC circuit breakers have successfully passed the tests prescribed by the following standards for extreme atmospheric conditions:
- IEC 60068-2-1 - dry cold (-55 °C)
- IEC 60068-2-2 - dry heat (+85 °C)
- IEC 60068-2-30 - damp heat (95 % relative humidity at 55 °C)
- IEC 60068-2-52 - salt mist (severity level 2).

CPB100602

Positive contact indication

All EasyPact EZC circuit breakers are suitable for isolation as defined in IEC standard 60947-2:
- the isolation position corresponds to the O (OFF) position
- the operating handle cannot indicate the O (OFF) position (“green colour” visible) unless the contacts are effectively open
- padlocks may not be installed unless the contacts are open
- installation of a rotary handle does not alter the reliability of the position-indication system.

The isolation function is certified by tests guaranteeing:
- the mechanical reliability of the position indication system
- the absence of leakage currents
- overvoltage withstand capacity between upstream and downstream connections.

EasyPact EZC circuit breakers take into account important concerns for environmental protection. Most components are recyclable and the parts are marked as specified in applicable standards.

LVED212091EN.indb 2 16-4-13 下午4:11

Ambient temperature

■ EasyPact EZC circuit breakers has been particularly designed to hold 100 % In at 50 °C without tripping in normal condition (except for earth-leakage circuit breakers).
■ EasyPact EZC circuit breakers may be used between -25 °C and +70 °C.
■ The permissible storage-temperature range for EasyPact EZC circuit breakers in the original packing is -35 °C to +85 °C.

DB116374

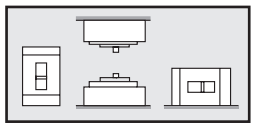

Installation positions.

Installation

EasyPact EZC circuit breakers are designed for easy installation in the various types of switchboards. They may be mounted vertically, horizontally or flat on their back without any derating of characteristics.

DB116375

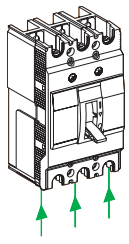

Reverse feeding.

Power supply

EasyPact EZC circuit breaker can be supplied from either the top or the bottom (reverse feeding) without any reduction in performance. For earth-leakage circuit breakers, reverse feeding is possible only up to 240 V AC.
This capability facilitates connection when installed in a switchboard.

Degree of protection

As per standards IEC 60529 (IP degree of protection) and EN 50102 (IK degree of protection against external mechanical impacts).

Bare circuit breaker with terminal shields			
DB116376 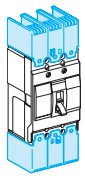	With toggle	IP20	IK07
DB116377 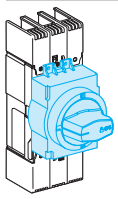	With direct rotary handle standard	IP40	IK07
Circuit breaker installed in a switchboard			
DB116378 DB116379 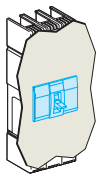	With toggle	IP40	IK07
DB116380 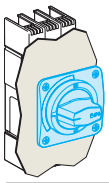	With direct rotary handle standard/VDE MCC	IP54	IK07
DB116381 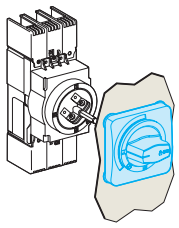	With extended rotary handle	IP54	IK08

LVED212091EN.indb 3 16-4-13 下午4:11

General characteristics (cont.)

CPB100611

Earth-leakage protection

EasyPact EZC circuit breakers have a specific version including earth-leakage protection.
This protection is fully integrated inside the breaker and does not require any additional space.
EasyPact EZC circuit breakers and earth-leakage circuit breakers are fully interchangeable.

Compliance with standards

EasyPact EZC earth-leakage circuit breakers comply with all the international standards listed page A-2:

- IEC 60947-1
- IEC 60947-2
- EN 60947-1
- EN 60947-2
- GB 14048.2
- JIS C8201-2-2 Annex 1 and Annex 2
- NEMA-AB1 (High Interrupting Capacity)
- UL 60947-4-1(old UL508)/CSA 22-2 no. 14.

They also comply with:

- VDE 664, operation down to -25 °C
- IEC 60255-4 and IEC 60801-2 to 60801-5 covering protection against nuisance tripping due to transient overvoltages, lightning strikes, switching of devices on the distribution system, electrostatic discharges, radiofrequency interference.

DB125803

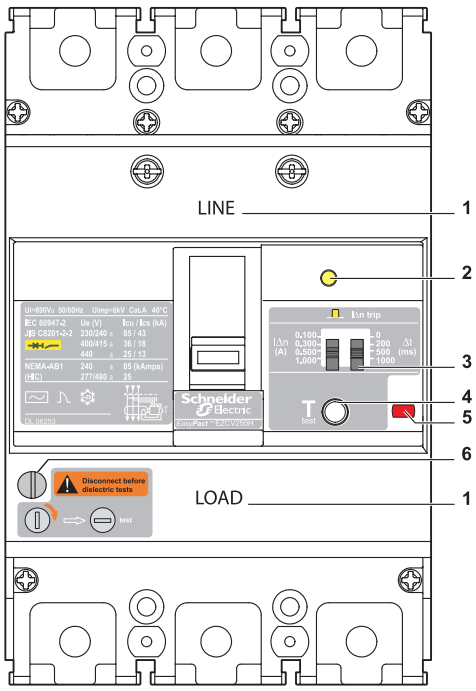

1 Line-Load (Ue > 300 V AC)
2 Mechanical indicator (ELCB)
3 Adjustable settings IΔn and time delay
4 ELCB test button
5 Push to trip button (MCCB)
6 Dielectric tests: disconnecting switch

Power supply

Reverse feeding
EasyPact EZC earth-leakage circuit breakers can be supplied from either the top or the bottom for voltages up to 240 V AC. For voltages over 240 V AC, only supply from the top is possible (Line-Load indication on the cover of the breaker).

Power supply of the electronics
EasyPact EZC earth-leakage circuit breakers are self-supplied by the distribution-system voltage and therefore do not require any external source. They fully comply with new IEC requirements (Annex B): they are powered from the three phases and continue to function even if one phase is missing.

Dielectric tests

EasyPact EZC earth-leakage circuit breakers are equipped with a disconnecting switch in order to protect the electronics during dielectric tests.
When the disconnecting switch is activated, the circuit breaker is automatically tripped. It is mechanically impossible to switch on the circuit breaker, until the earth-leakage function is re-energised.

Tripping features

Tripping indications:

- EasyPact EZC earth-leakage circuit breakers have a yellow mechanical indicator to locally signal tripping due to an earth fault.
- EasyPact EZC earth-leakage circuit breakers may be equipped with an earth-leakage alarm switch (ALV) to remotely signal tripping due to an earth fault.

Resetting
EasyPact EZC earth-leakage circuit breakers are fully reset by the operating handle. After resetting, tripping indicators (mechanical and ALV) come to normal position.

ELCB protection characteristics

Sensitivity IΔn (A)		adjustable	0.1 - 0.3 - 0.5 - 1
Time delay	Intentional delay (ms)	adjustable	0 - 200 - 500 - 1000
	Max. breaking time (s)		0.15 – 0.4 – 1 - 2
Rated voltage	AC 50/60 Hz (V)		100…440

LVED212091EN.indb 4 16-4-13 下午4:11

Earth-leakage circuit breakers

With three built-in protections:
- overload
- short-circuit
- earth-leakage.

From 63 A to 250 A

With adjustable sensibility and time delay

Up to 36 kA at 415 V

In 3 poles and 4 poles

DB125805

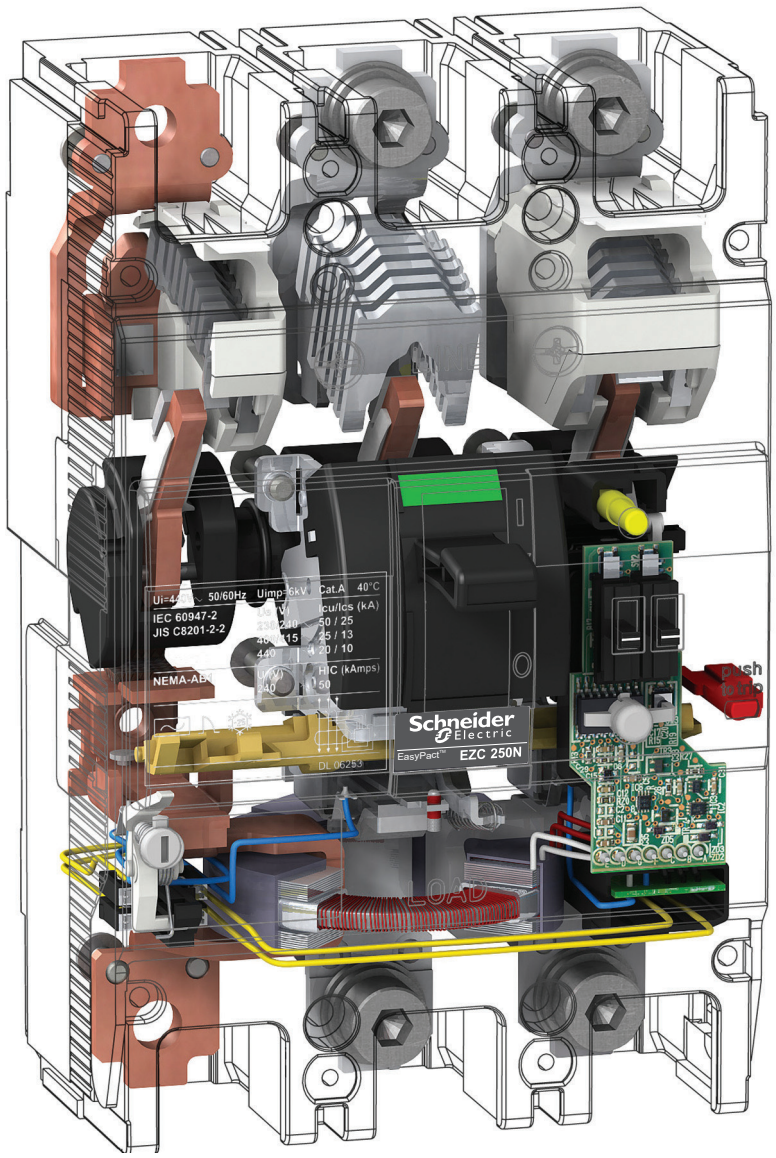

LVED212091EN.indb 5 16-4-13 下午4:11

Selection table

CPB100600

EZC100-1P.

CPB100601

EZC100-2P.

CPB100602

EZC100-3P.

CPB100603

EZC100-4P.

CPB100604

EZC250-3P.

EasyPact EZC circuit breakers			
Fixed version			
Plug-in version			
Number of poles			
Rated current (A)	**In**	at 40 °C	
Rated insulation voltage (V)	**Ui**		
Rated impulse withstand voltage (kV)	**Uimp**		
Rated operational voltage (V)	**Ue**	AC 50/60 Hz	
		DC	
Electrical characteristics as per IEC 60947-2, EN 60947-2, JIS C8201-2-1			
Ultimate breaking capacity (kA rms)	**Icu**	AC 50/60 Hz	110/130 V
			220/230/240 V
			380 V
			400/415 V
			440 V
			550 V
		DC	125 V (1P)
			250 V (2P in series)
Rated service breaking capacity (kA rms)	**Ics**	% Icu	110-400 V
			415-550 V
Suitability for isolation			
Utilisation category			
Pollution degree			
Endurance (C-O cycles)	Mechanical		
	Electrical	In/415 V	
Electrical characteristics as per NEMA-AB1			
Breaking capacity (kA rms)	**HIC**	AC 50/60 Hz	240 V
			277/480 V
Protection			
Overload protection	Bimetal		
Instantaneous protection	Magnetic		Fixed (±20 %)
Auxiliaries			
Indication contacts	Auxiliary switch		AX
	Alarm switch		AL
	Combined AX + AL		AXAL
Voltage releases	Shunt trip release		SHT
	Undervoltage release		UVR
Installation			
Connection	Crimp lugs/bars		
Accessories	Box lugs for bare cables		
	Rotary handles		Direct
			Extended
	Terminal extensions		
	Spreaders		
	Phase barriers		
	Terminal shields		
	Padlocking system		
	DIN rail adaptor		
Dimension and weight			
Dimensions (mm)	D x H		
	W		
Weight (kg)			

LVED212091EN.indb 6 16-4-13 下午4:11

	EZC100B	EZC100F	EZC100N		EZC100H		EZC250F	EZC250N	EZC250H
	■	■	■	■	■	■	■	■	■
	■	■	-	■ (4)	-	■ (4)	■	■	■
	3	3	1	3-4	1	2-3-4	3	3	2-3
	15, 16, 20, 25, 30, 32, 40, 45, 50, 60	15, 16, 20, 25, 30, 32, 40, 45, 50, 60, 63, 75, 80, 100	15, 16, 20, 25, 30, 32, 40, 45, 50, 60, 63, 75, 80, 100	15, 16, 20, 25, 30, 32, 40, 45, 50, 60, 63, 75, 80, 100	15, 16, 20, 25, 30, 32, 40, 45, 50, 60, 63, 75, 80, 100	15, 16, 20, 25, 30, 32, 40, 45, 50, 60, 63, 75, 80, 100	100, 125, 150, 160, 175, 200, 225, 250	100, 125, 150, 160, 175, 200, 225, 250	100, 125, 150, 160, 175, 200, 225, 250
	690	690	690	690	690	690	690	690	690
	6	6	6	6	6	6	6	6	6
	550	550	415	550	415	550	550	550	550
	-	250	125	250	125	250	250	250	250
	10	25	25	25	50	100	25	50	85
	10	25	18	25	25	100 (1)	25	50	85
	7.5	10	2.5	18	5	30	18	25	36
	7.5	**10**	**2.5**	**15**	**5**	**30**	**18**	**25**	**36**
	5	7.5	-	10	-	20	15	20	25
	2.5	5	-	5	-	10	5	8	10
	-	5	5	5	10	10	5	20	30
	-	5	-	5	-	10	5	20	30
	25 %	50 %	50 %	50 %	50 %	50 %	50 %	50 %	50 %
	25 %	50 %	50 %	50 %	50 %	25 %	50 %	50 %	50 %
	■	■	■	■	■	■	■	■	■
	A	A	A	A	A	A	A	A	A
	3	3	3	3	3	3	3	3	3
	13 000	13 000	13 000	13 000	13 000	13 000	10 000	10 000	10 000
	4 000	4 000	4 000	4 000	4 000	4 000	5 000	5 000	5 000
	-	-	10	25	18	100	25	50	85
	-	-	10 (2)	10	18 (2)	18 (3)	15	18	25 (3)
	fixed	fixed	fixed	fixed	fixed	fixed	fixed	fixed	fixed
	fixed	fixed	fixed	fixed	fixed	fixed	10 In	10 In	10 In
	■	■	-	■	-	■	■	■	■
	■	■	-	■	-	■	■	■	■
	■	■	-	■	-	■	■	■	■
	■	■	-	■	-	■	■	■	■
	■	■	-	■	-	■	■	■	■
	■	■	■	■	■	■	■	■	■
	■	■	■	■	■	■	■	■	■
	■	■	-	■	-	■ (3)	■	■	■
	■	■	-	■	-	■ (3)	■	■	■
	-	-	-	-	-	-	■	■	■
	■	■	-	■	-	■	■	■	■
	■	■	■	■	■	■	■	■	■
	■	■	-	■	-	■ (3)	■	■	■
	■	■	■	■	■	■	■	■	■
	■	■	■	■	■	■	-	-	-
	60 x 130	60 x 130	60 x 130	60 x 130	60 x 130	60 x 130	60 x 165	60 x 165	60 x 165
	75	75	25	75 (3P) 100 (4P)	25	50 (2P) 75 (3P) 100 (4P)	105	105	105
	0.78	0.78	0.28	0.78 (3P) 1.0 (4P)	0.28	0.6 (2P) 0.78 (3P) 1.0 (4P)	1.3	1.3	1.1 (2P) 1.3 (3P)

(1) 50 kA for 2 poles.
(2) For 277 V only.
(3) For 3 and 4 poles only.
(4) For 3P only.

LVED212091EN.indb 7 16-4-13 下午4:11

Selection table (cont.)

CPB100605

EZC250-4P.

CPB100606

EZCV250-4P.

CPB100607

EZC400-3P.

EasyPact EZC circuit breakers			
Fixed version			
Plug-in version			
Number of poles			
Rated current (A)	**In**	at 40 °C	
Rated insulation voltage (V)	**Ui**		
Rated impulse withstand voltage (kV)	**Uimp**		
Rated operational voltage (V)	**Ue**	AC 50/60 Hz	
		DC	
Electrical characteristics as per IEC 60947-2, EN 60947-2 and JIS C8201-2-1/C8201-2-2			
Ultimate breaking capacity (kA rms)	**Icu**	AC 50/60 Hz	220/230 V
			380 V
			400/415 V
			440 V
			550 V
		DC	125 V (1P)
			250 V (2P in series)
Rated service breaking capacity (kA rms)	**Ics**	% Icu	
Suitability for isolation			
Utilisation category			
Pollution degree			
Endurance (C-O cycles)	Mechanical		
	Electrical	In/415 V	
Electrical characteristics as per NEMA-AB1			
Breaking capacity (kA rms)	**HIC**	AC 50/60 Hz	240 V
			277/480 V
Protection			
Overload protection	Bimetal		
Instantaneous protection	Magnetic		fixed (± 20 %)
Earth-leakage protection			
Sensitivity (A)	IΔn		adjustable
Time-delay (ms)	Δt		adjustable
Max. breaking time (s)	at 2 IΔn		
Auxiliaries			
Indication contacts	Auxiliary switch	OF/AX	
	Alarm switch	SD/AL	
	Combined AX + AL	AXAL	
	Earth-alarm switch	ALV	
Voltage releases	Shunt trip release	MX/SHT	
	Undervoltage release	MN/UVR	
Installation			
Connection	Crimp lugs / bars		
Accessories	Box lugs for bare cables		
	Rotary handles	Direct	
		Extended	
	Terminal extensions		
	Spreaders		
	Phase barriers		
	Terminal shields		
	Padlocking system		
Dimension and weight			
Dimensions (mm)	D x H		
	W		
Weight (kg)			

LVED212091EN.indb 8 16-4-13 下午4:11

	EZC250N	EZC250H	EZCV250N	EZCV250H	EZC400N	EZC400H	EZC630N	EZC630H
	■	■	■	■	■	■	■	■
	■	■	■	■	-	-	-	-
	4	4	3-4	3-4	3-4	3-4	3-4	3-4
	63, 80, 100, 125, 150, 160, 175, 200, 225, 250	63, 80, 100, 125, 150, 160, 175, 200, 225, 250	63, 80, 100, 125, 150, 160, 175, 200, 225, 250	63, 80, 100, 125, 150, 160, 175, 200, 225, 250	320, 350, 400	320, 350, 400	400, 500, 600	400, 500, 600
	690	690	440	440	690	690	690	690
	6	6	6	6	6	6	6	6
	550	550	440	440	440	440	440	440
	250	250	-	-	250	250	250	250
	50	85	85	100	40	70	40	70
	25	36	25	36	36	50	36	50
	25	**36**	**25**	**36**	**36**	**50**	**36**	**50**
	20	25	20	25	36	50	36	50
	8	10	-	-	-	-	-	-
	20	30	-	-	-	-	-	-
	20	30	-	-	-	-	-	-
	50 %	50 %	50 %	50 %	50 %	50 %	100% (220-415V) 50% (440V)	100% (220-415V) 50% (440V)
	■	■	■	■	■	■	■	■
	A	A	A	A	A	A	A	A
	3	3	3	3	3	3	3	3
	10 000	10 000	10 000	10 000	10 000	10 000	10 000	10 000
	5 000	5 000	5 000	5 000	4 000	4 000	3 000	3 000
	50	85	50	85	50	85	50	85
	18	25	-	-	25	35	25	35
	fixed	fixed	fixed	fixed	fixed	fixed	fixed	fixed
	10 In	10 In	10 In	10 In	10 In	10 In	10 In (400/500A) 5000A (600A)	10 In (400/500A) 5000A (600A)
	-	-	0.1/0.3/0.5/1	0.1/0.3/0.5/1	-	-	-	-
	-	-	0/200/500/1000	0/200/500/1000	-	-	-	-
	-	-	0.15/0.4/1/2	0.15/0.4/1/2	-	-	-	-
	■	■	■	■	■	■	■	■
	■	■	■	■	■	■	■	■
	■	■	■	■	-	-	-	-
	-	-	■	■	-	-	-	-
	■	■	■	■	■	■	■	■
	■	■	■	■	■	■	■	■
	■	■	■	■	■	■	■	■
	■	■	■	■	■	■	■	■
	■	■	■	■	■	■	■	■
	■	■	■	■	■	■	■	■
	■	■	■	■	■	■	■	■
	■	■	■	■	■	■	■	■
	■	■	■	■	■	■	■	■
	■	■	■	■	■	■	■	■
	■	■	■	■	■	■	■	■
	68 x 165	68 x 165	68 x 165	68 x 165	110 x 255	110 x 255	110 x 255	110 x 255
	140	140	105 (3P) 140 (4P)	105 (3P) 140 (4P)	140 (3P) 185 (4P)	140 (3P) 185 (4P)	140 (3P) 185 (4P)	140 (3P) 185 (4P)
	1.8	1.8	1.6 (3P) 2.1 (4P)	1.6 (3P) 2.1 (4P)	4.8 (3P) 6.4 (4P)	4.8 (3P) 6.4 (4P)	4.8 (3P) 6.4 (4P)	4.8 (3P) 6.4 (4P)

LVED212091EN.indb 9 16-4-13 下午4:11

Electrical and mechanical accessories overview

EasyPact EZC100

EasyPact EZC circuit breaker EZC100 comes with a full range of accessories to fulfill different application requirements and make it easy for the end-user.

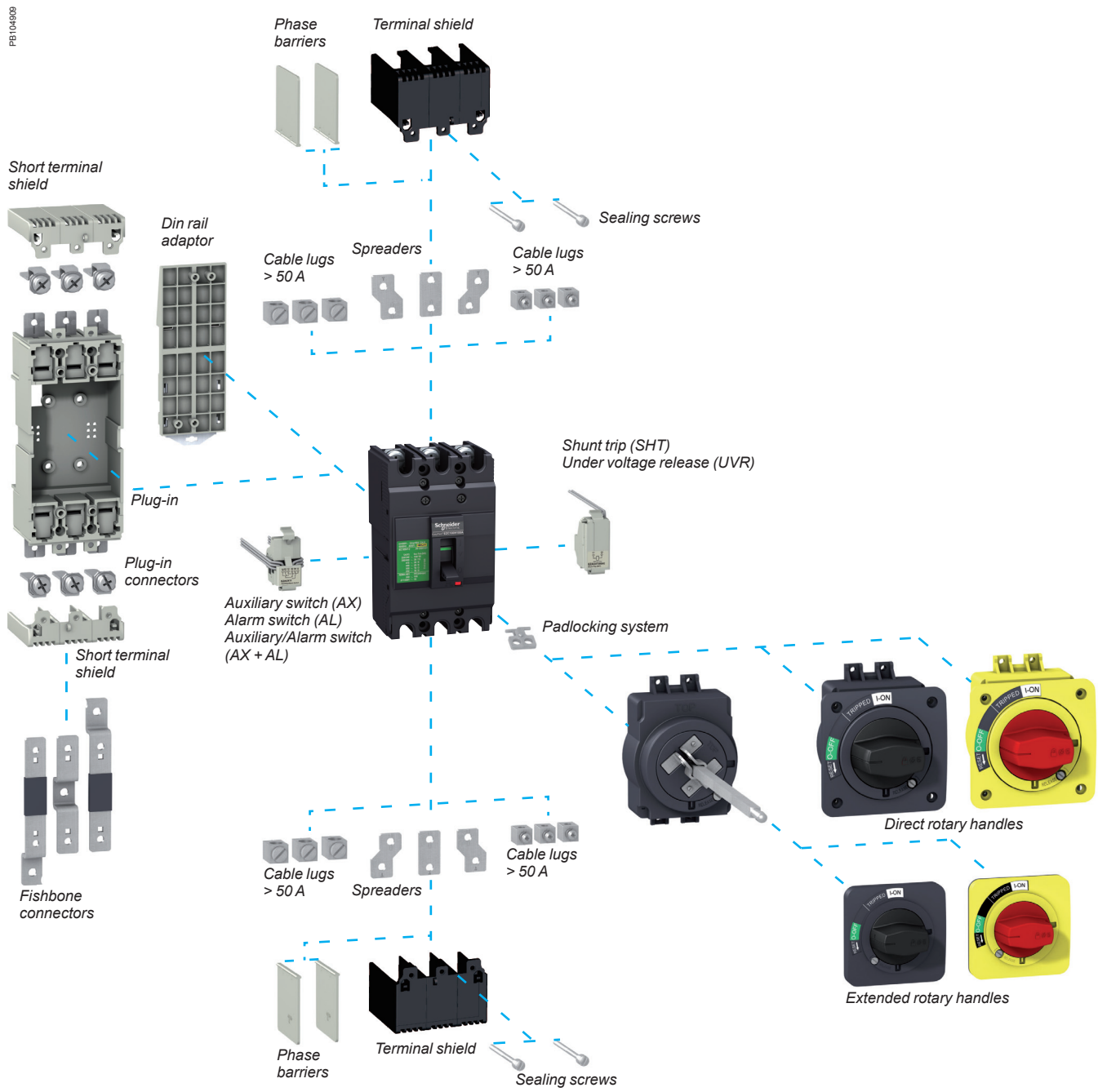

LVED212091EN.indb 10
16-4-13 下午4:11

EasyPact EZC250

EasyPact EZC circuit breaker EZC250 comes with a full range of accessories to fulfill different application requirements and make it easy for the end-user.

PB106410_176

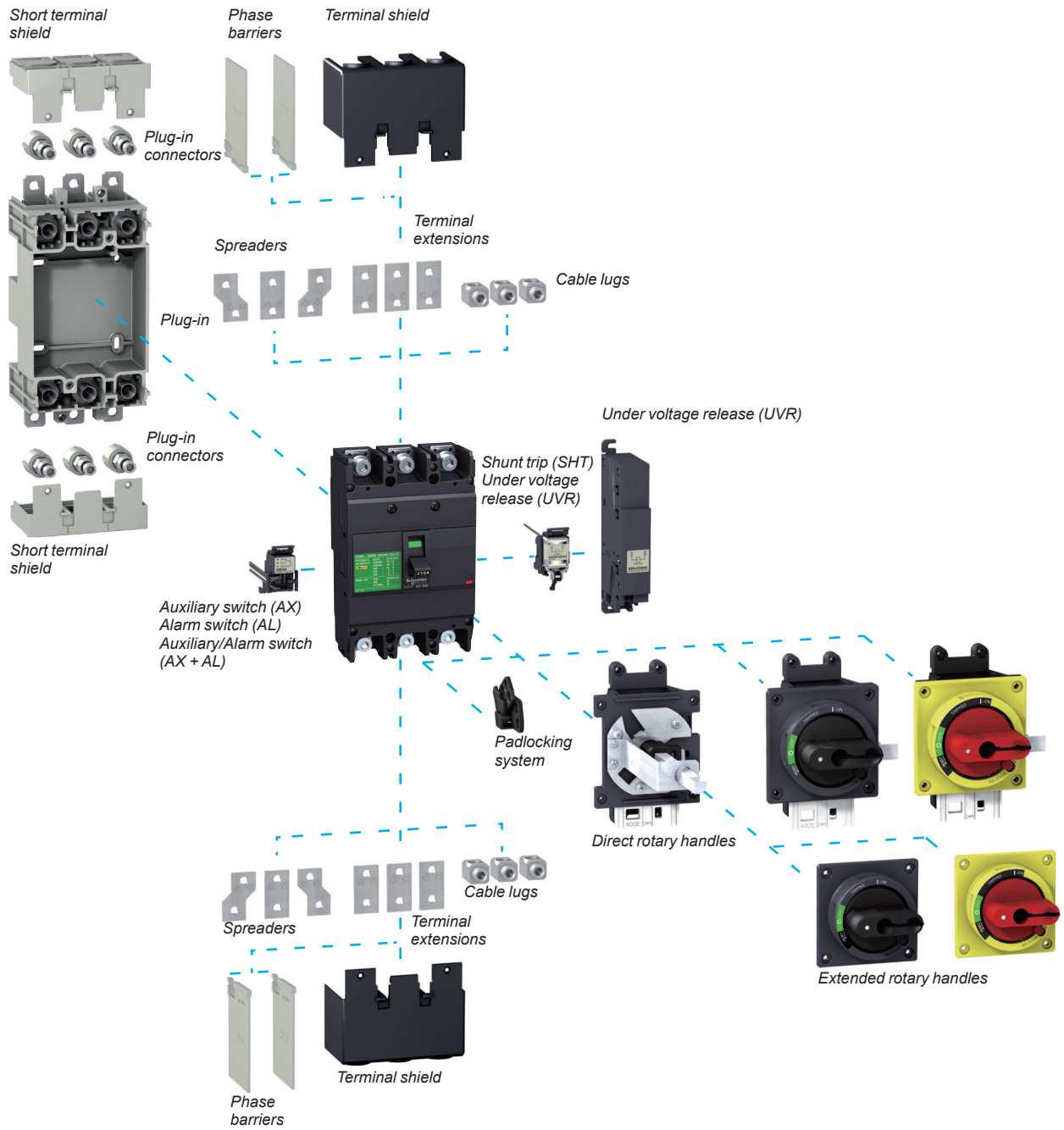

LVED212091EN.indb 11 16-4-13 下午4:11

Electrical and mechanical accessories overview

EasyPact EZCV250

EasyPact EZC circuit breaker EZCV250 comes with a full range of accessories to fulfill different application requirements and make it easy for the end-user.

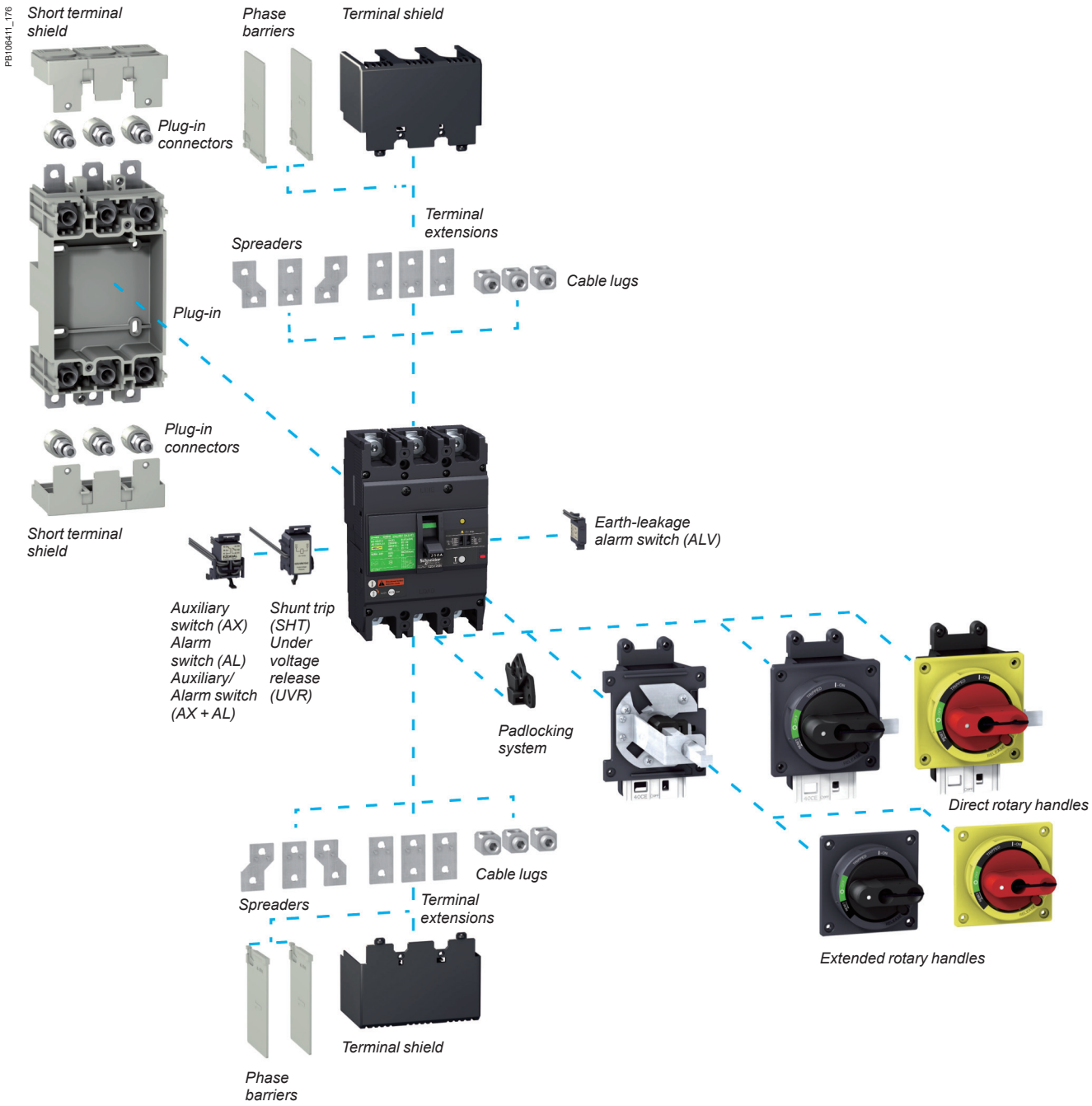

LVED212091EN.indb 12
16-4-13 下午4:11

EasyPact EZC400-630

EasyPact EZC circuit breaker EZC400-630 comes with a full range of accessories to fulfill different application requirements and make it easy for the end-user.

DB400001_1

Insulation accessories

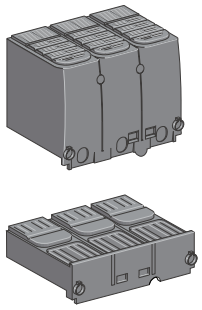

Sealable terminal shields

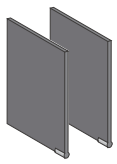

Interphase barriers

Connection

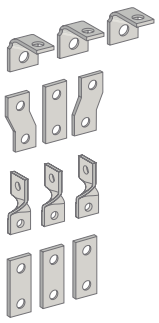

Terminal extensions

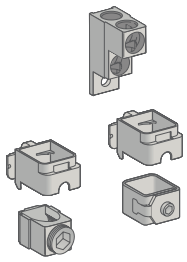

Cable connectors

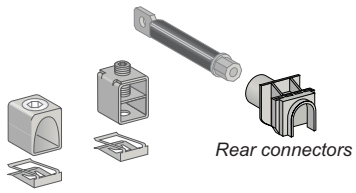

Cable connectors

Rear connectors

Electrical auxiliaries

Indication contact

Voltage release

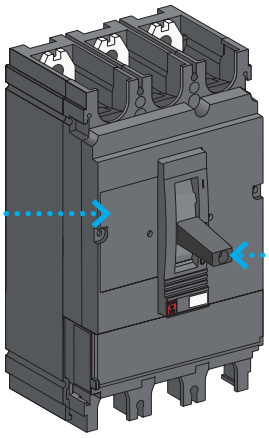

Control accessories

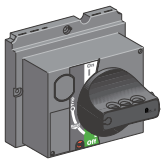

Direct rotary handle

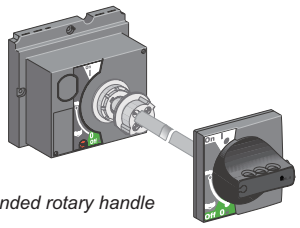

Extended rotary handle

LVED212091EN.indb 13 16-4-13 下午4:11

Electrical auxiliaries 100-250AF

AX - AL - AXAL - ALV

CPB100612

EZC100.

CDB500603

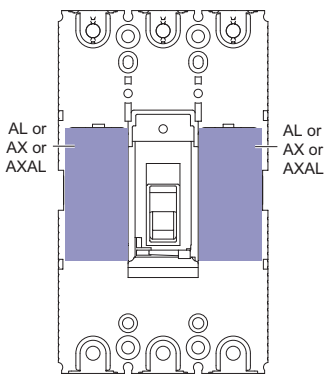

AXAL and AX electrical auxiliaries on EZC100.

CDB500604

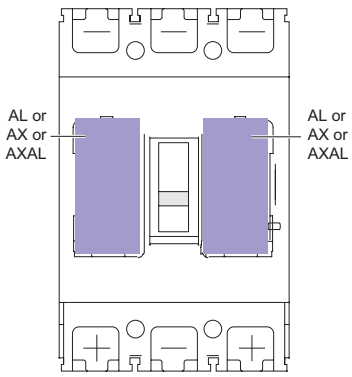

AXAL electrical auxiliaries on EZC250.

CDB500605

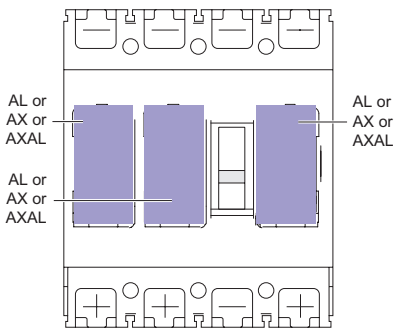

AXAL, AX and ALV electrical auxiliaries on EZCV250.

Plug-in location: AX - AL - AXAL - ALV

EZC100

DB116832

EZC100-2P. EZC100-3P.

DB116833

EZC100-4P.

EZC250

DB116834

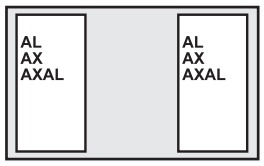

EZC250-3P.

EZC250-4P.

EZCV250

DB116835

EZCV250-3P.

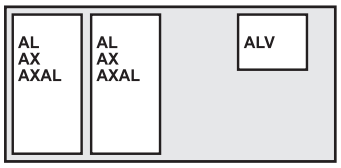

EZCV250-4P.

Indication contacts

Provide remote circuit breaker status information.
They can be used for indications, electrical locking, relaying, etc.
Common-point changeover contacts.

Auxiliary switch (ON/OFF)
AX indicates the position of the circuit breaker contacts.

Alarm switch (trip indication)
- ■ AL indicates that the circuit breaker has tripped due to:
  - □ an overload
  - □ a short-circuit
  - □ operation of a voltage release.
- ■ ALV indicates that the circuit breaker has tripped due to an of earth-leakage fault.

They return to de-energised state when the circuit breaker is reset.

Characteristics

Contacts					
Rated thermal current (A)		5			
Minimum load		10 mA at 24 V			
Utilisation category (IEC 60947-5-1)		AC12	AC15	DC12	DC14
Operational current (A)	24 V	5	5	4	3
	48 V	5	5	2.5	1
	125 V	5	3	0.4	0.4
	250 V	3	2	0.2	0.2
Connections					
Connection wire length		450 mm			
Cross-section		EZC100: 1 mm²,			
		EZC250/EZCV250: 1.5 mm²			

LVED212091EN.indb 14 16-4-13 下午4:11

PB101862-21

Auxiliary switch (AX) EZAUX10.

PB101876-21

Auxiliary switch (AX) EZEAX.

PB101893-28

Earth-leakage alarm switch (ALV).

DB116386

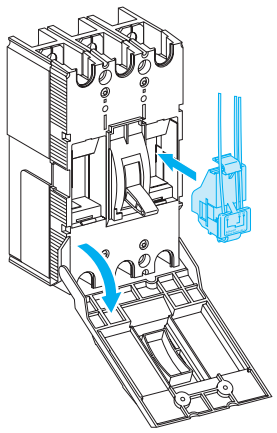

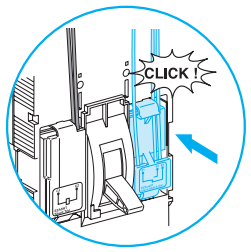

All EasyPact EZC electrical auxiliaires are “snapped in place”

LVED212091EN.indb 15 16-4-13 下午4:11

Electrical auxiliaries 100-250AF

SHT - UVR - UVRN

CPB100616

EZC250.

CDB500606

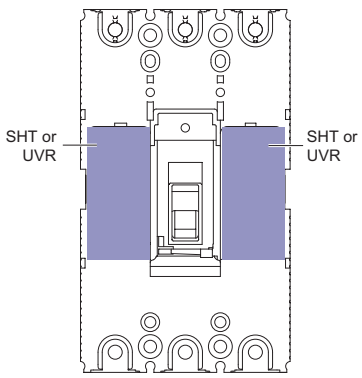

SHT and UVR releases on EZC100.

CDB500607

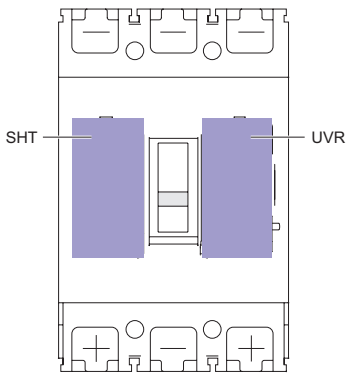

SHT and UVR releases on EZC250.

CDB500608

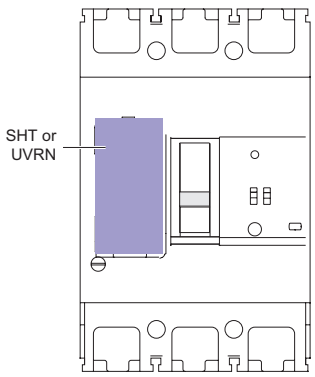

UVRN release on EZCV250.

Plug-in location : SHT - UVR - UVRN

EZC100

DB116836

EZC100-2P. *EZC100-3P.*

DB116837

EZC100-4P.

EZC250

DB116838

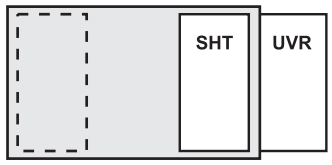

EZC250-3P.

EZC250-4P.

EZCV250

DB116839

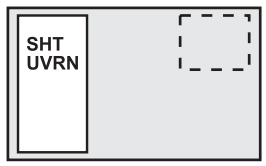

EZCV250-3P.

EZCV250-4P.

Remote tripping

Shunt Trip (SHT) or Under Voltage Release (UVR/UVRN).

Shunt Trip (SHT)

- This release trips the circuit breaker when the control voltage rises above 0.7 x Un
- Control signals can be of the impulse type (≥ 20 ms) or maintained.

Under Voltage Release (UVR/UVRN)

- This release trips the circuit breaker when the control voltage drops below a tripping threshold
- Tripping threshold between 0.35 and 0.7 times the rated voltage
- Circuit breaker closing is possible only if the voltage exceeds 0.85 times the rated voltage.

Operation

When the circuit breaker has been tripped by an SHT or UVR/UVRN release, it must be reset locally:

- SHT or UVR/UVRN tripping takes priority over manual closing
- in the presence of a standing trip order, closing of the contacts, even temporary, is not possible.

Circuit breaker tripping by an SHT/UVR/UVRN release meets the requirements of standard IEC 60947-2.

Characteristics

Mechanical				
Mechanical endurance		10 % of MCCB mechnical endurance		
Electrical		**EZC100**	**EZC250/EZCV250**	
		AC/DC	**AC**	**DC**
SHT	pick-up consumption	< 30 VA	< 30 VA	< 35 W
	response time	< 50 ms	< 50 ms	< 100 ms
UVR	seal-in consumption	< 5 VA	< 5 VA	< 10 W
	response time	< 50 ms	< 50 ms	< 100 ms
UVRN	seal-in consumption	< 5 VA	< 5 VA	< 10 W
	response time	< 50 ms	< 50 ms	< 100 ms

Connections	**EZC100**	**EZC250/EZCV250**
SHT	pre-wired (1 mm²)	pre-wired (0.5 mm²)
UVR	pre-wired (1 mm²)	screws (< 2 mm²)
UVRN	pre-wired (1 mm²)	pre-wired (0.5 mm²)

LVED212091EN.indb 16 16-4-13 下午4:11

PB101865-16

Shunt Trip EZASHT.

PB101879-18

Shunt Trip EZESHT.

PB101866-18

Under Voltage Release EZAUVR.

PB101894-27

Under Voltage Release EZEUVRN.

PB101880-15

Under Voltage Release EZEUVR.

Installation

- ■ EZC100 SHT and UVR: internal mounting
- ■ EZC250/EZCV250:
- □ SHT: internal mounting
- □ UVR: external mounting
- □ UVRN: internal mounting

LVED212091EN.indb 17 16-4-13 下午4:11

Direct rotary handle 100-250AF

PB101867-31

Direct rotary handle (black) for EZC100.

PB102159-30

Direct rotary handle (red/yellow) for EZC100.

PB101881-33

Direct rotary handle (black) for EZC250/EZCV250.

PB102157-33

Direct rotary handle (red/yellow) for EZC250/EZCV250.

Direct rotary handle

Suitable for Motor Control Centre (MCC) switchboards.

- ■ Degree of protection IP40 or IP54, IK07 (IP54 with gasket supplied).
- ■ The direct rotary handle maintains:
  - □ suitability for isolation
  - □ indication of the three positions O (OFF), I (ON) and tripped
  - □ circuit breaker locking capability in the OFF position by one to three padlocks, (padlock not supplied) shackle diameter Ø 5 for EZC100, Ø 8 for EZC250/EZCV250
  - □ door opening disabled when the circuit breaker is ON
  - □ circuit breaker closing is disabled if the door is open.

IP40 or IP54

DB116387

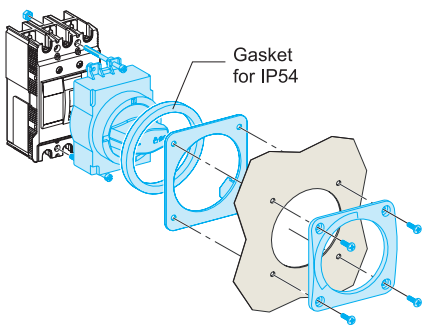

EZC100.

DB116388

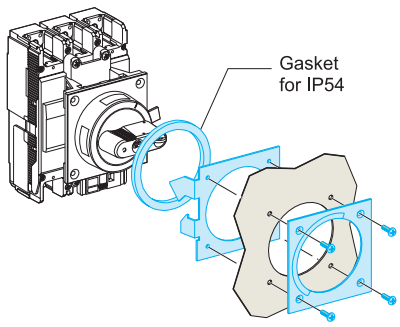

EZC250/EZCV250.

Padlocking

DB116389

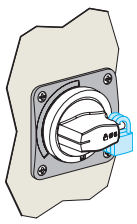

EZC100.

DB116390

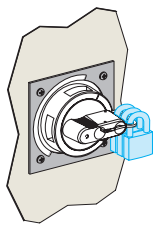

EZC250/EZCV250.

Designation	Cat. no.	
	EZC100	EZC250/EZCV250
Direct rotary handle (black)	EZAROTDS	EZEROTDS
Direct rotary handle (red/yellow)	EZAROTDSRY	EZEROTDSRY

LVED212091EN.indb 18 16-4-13 下午4:11

Extended rotary handle 100-250AF

PB101868-46

Extended rotary handle (black) for EZC100.

PB102158-46

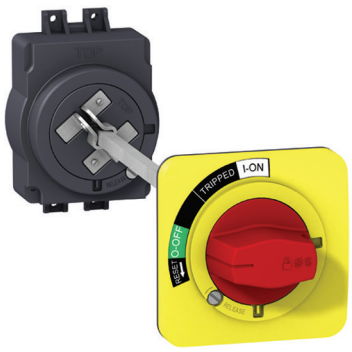

Extended rotary handle (red/yellow) for EZC100.

PB101882-42

Extended rotary handle (black) for EZC250/EZCV250.

PB102156-42

Extended rotary handle (red/yellow) for EZC250/EZCV250.

Extended rotary handle

The extended rotary handle is used to control, from the front face of the switchboard, a device installed at the back of the switchboard.

■ Degree of protection IP40 or IP54, IK08 (IP54 with gasket supplied).

■ The extended rotary handle maintains:
□ suitability for isolation
□ indication of the three positions O (OFF), I (ON) and tripped
□ circuit breaker locking capability in the OFF position by one to three padlocks, (padlock not supplied) shackle diameter: Ø 5 for EZC100, Ø 8 for EZC250/EZCV250
□ door opening disabled when the circuit breaker is ON.

■ The extended rotary handle is made up of:
□ a unit on the front cover of the circuit breaker (secured by screws)
□ an assembly (handle and front plate) on the door that is always secured in the same position, whether the circuit breaker is installed vertically or horizontally
□ an extension shaft that must be adjusted to the distance between back of circuit breaker and door.

IP40 or IP54

DB116391

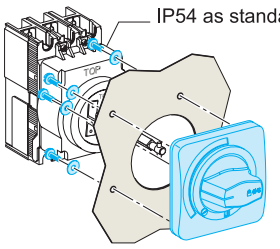

EZC100.

DB116392

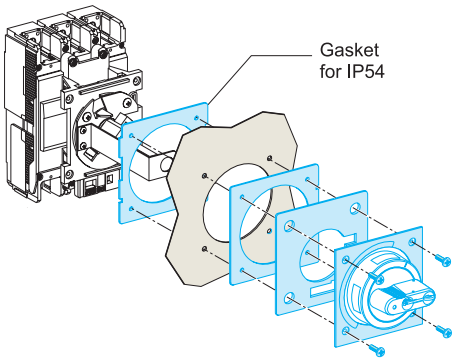

EZC250/EZCV250.

Padlocking

DB116389

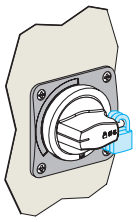

EZC100.

DB116390

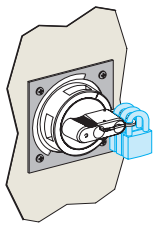

EZC250/EZCV250.

Designation	Cat. no.	
	EZC100	EZC250/EZCV250
Extended rotary handle (black)	EZAROTE	EZEROTE
Extended rotary handle (red/yellow)	EZAROTERY	EZEROTERY

LVED212091EN.indb 19 16-4-13 下午4:11

Plug-in
100 A

The plug-in allows you to connect, disconnect from the circuit breaker rapidly.

CPB100620

Plug-in
The plug-in base is equipped with terminals which, depending on their orientation, serve for front and rear connection. Degree of protection IP20.

DB127455

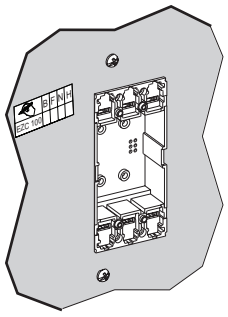

Front connection.

DB127456

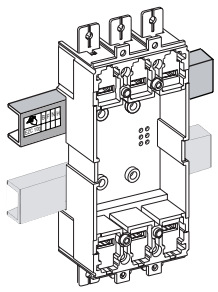

Fixation on rail DIN.

DB127457

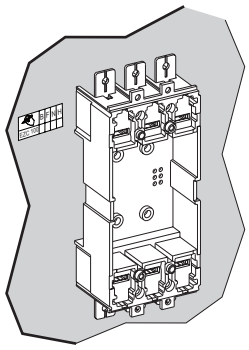

Fixation on rear plate.

Connection accessories
All accessories for fixed devices (bars, lugs) may be used with the plug-in base.

DB127458

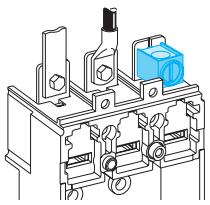

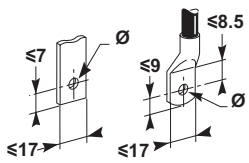

Tightening torque

References Plug-in	100 A
EZAPLUG3L	Kit, plug-in base 3P 15 A-50 A
EZAPLUG3H	Kit, plug-in base 3P 60 A-100 A
EZAFSHB3 - set of 3	Fishbone connectors
EZAPCON1L - set of 2	Plug-in connectors 15 A-50 A
EZAPCON1H	Plug-in connectors 60 A-100 A

PB106398-30

EZAPCON1L

PB106398-33

EZAPCON1H

PB106397-27

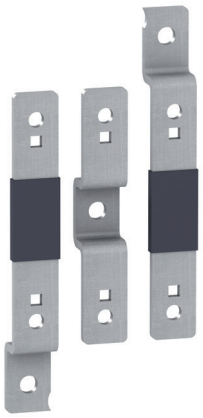

EZAFSHB3

CPB100609

Fishbone.

Fishbone
The fishbone, designed for vertical installation, saves space and reduces cabling time.

LVED212091EN.indb 20 16-4-13 下午4:11

Short terminal shield only.

CPB100621

DB127460

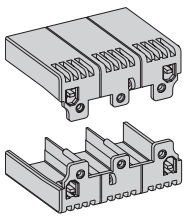

Terminal shields

Insulating accessories used for protection against direct contact with power circuits. They provide IP40 degree of protection and IK07 mechanical impact protection.

Terminal-shield types

Easypact EZC 100 to 250:

- short terminal shields

Short terminal shields

They are used with:

- plug-in in all connection configurations
- fixed versions with rear connection.

Terminal shields and pitch

Combination possibilities are shown below.

Circuit breaker Easypact EZC	100/160/250
Pitch (mm)	35

DB111356

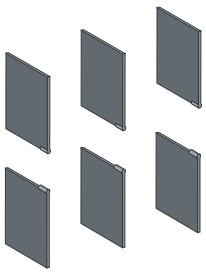

Interphase barriers

Safety accessories for maximum insulation at the power-connection points:

- they clip easily onto the circuit breaker
- single version for fixed devices and adapters on plug-in bases
- not compatible with terminal shields
- the adapter for the plug-in base is required for mounting on plug-in and withdrawable versions.

LVED212091EN.indb 21 16-4-13 下午4:11

Plug-in
250 A

The plug-in allows you to connect, disconnect from the circuit breaker rapidly.

Plug-in
The plug-in base is equipped with terminals which, depending on their orientation, serve for front and rear connection. Degree of protection IP20.

DB127461

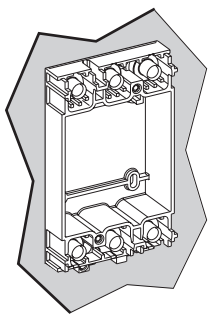

Front connection.

DB127462

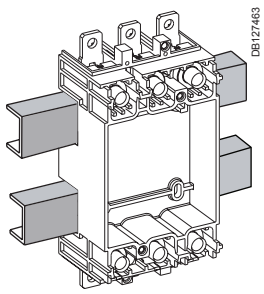

Fixation on rail DIN.

DB127463

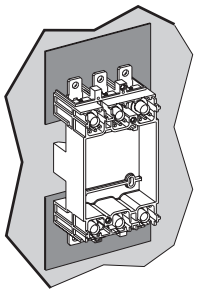

Fixation on rear plate.

Connection accessories
All accessories for fixed devices (bars, lugs).

DB127464-1

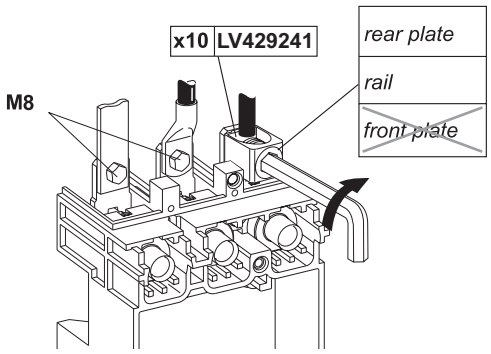

DB127464-4

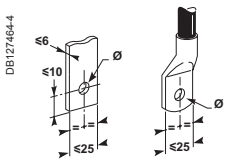

Tightening torque

PB106402-43

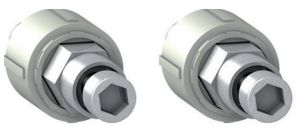

EZEPCON1

References Plug-in	250 A
EZEPLUG3L - 60 mm breaker	Kit, plug-in base 3P 100 A - 250 A
EZEPLUG3H - 68 mm breaker	Kit, plug-in base 3P 100 A - 250 A
EZEPLUG4 - 68 mm breaker	Kit, plug-in base 4P 100 A - 250 A
EZEPCON1 - set of 2	Kit, plug-in connectors 100 A - 250 A

LVED212091EN.indb 22 16-4-13 下午4:11

Short terminal shield only

CPB100622

Terminal shields

Insulating accessories used for protection against direct contact with power circuits. They provide IP40 degree of protection and IK07 mechanical impact protection.

Terminal-shield types

Easypact EZC 100 to 250:

- short terminal shields.

Short terminal shields

They are used with:

- plug-in in all connection configurations
- fixed versions with rear connection.

Terminal shields and pitch

Combination possibilities are shown below.

Circuit breaker Easypact	100/160/250
Short terminal shields	
Pitch (mm)	35

DB111356

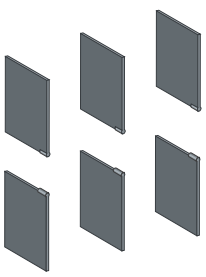

Interphase barriers.

Interphase barriers

Safety accessories for maximum insulation at the power-connection points:

- they clip easily onto the circuit breaker
- single version for fixed devices and adapters on plug-in bases
- not compatible with terminal shields
- the adapter for the plug-in base is required for mounting on plug-in and withdrawable versions.

DB127466

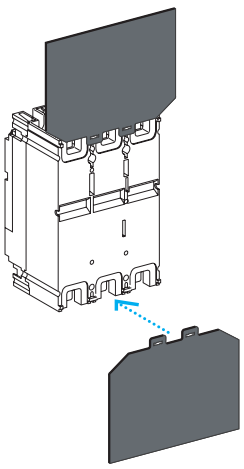

Rear insulating screens.

Rear insulating screens

Safety accessories providing insulation at the rear of the device.
Their use is mandatory for devices with spreaders, installed on backplates, when terminal shields are not used.
The available screen dimensions are shown below.

Circuit breaker Easypact		100/160/250
3P	W x H x thickness (mm)	140 x 105 x 1
4P	W x H x thickness (mm)	175 x 105 x 1

LVED212091EN.indb 23 16-4-13 下午4:11

Power connections and cable lugs 100-250AF

DB116395

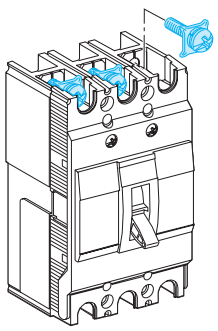

Standard circuit breaker terminals

All EasyPact EZC circuit breakers are supplied with terminal screws

EZC100 15 to 50 A — Screw M5

E88221

EZC100 60 to 100 A — Screw M8

E88222

EZC250/EZCV250 63 to 250 A — Screw M8

DB112345

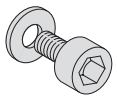

DB116396

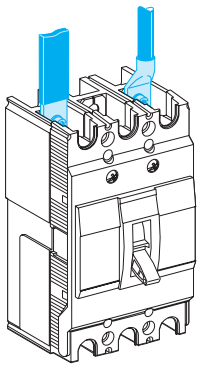

Connection of insulated bars or cables with lugs

		EZC100	EZC250/ EZCV250
Bars	L (mm)	≤ 17	≤ 25
	h (mm)	d + 10	d + 10
	d (mm)	≤ 7	≤ 8
	e (mm)	≤ 6	≤ 6
	Ø (mm) ≤ 50 A	5.5	-
	Ø (mm) > 50 A	8.5	9
Crimp lugs	L (mm)	≤ 17	≤ 25
	d (mm)	≤ 9	≤ 8
	Ø (mm) ≤ 50 A	5.5	-
	Ø (mm) > 50 A	8.5	9
Tightening torque	≤ 50 A	2 N.m	-
	> 50 A	5.5 N.m	13 N.m

DB112346

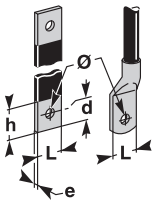

DB116397

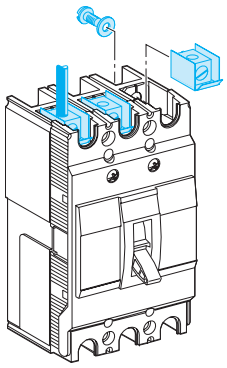

Cable lugs

Cable lugs directly screwed on standard circuit breaker terminals.

≤ 50 A (EZC100)	> 50 A (EZC100)	≥ 100 A (EZC250/EZCV250)
E88190	E88189	DB115938 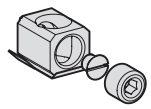
Cables from 2.5 to 16 mm².	Cables from 10 to 50 mm².	Cables from 42.2 to 150 mm².

Designation	Cat. no.	
	EZC100	EZC250/EZCV250
Cable lug up to 50 A (set of 2)	**EZALUG0502** (1)	-
Cable lug up to 50 A (set of 3)	**EZALUG0503** (1)	-
Cable lug from 60 A up to 100 A (set of 2)	**EZALUG1002** (2)	-
Cable lug from 60 A up to 100 A (set of 3)	**EZALUG1003** (2)	-
Cable lug from 100 A up to 250 A (set of 3)	-	**EZELUG2503**
Cable lug from 100 A up to 250 A (set of 4)	-	**EZELUG2504**

Important:
(1) EZALUG0502 and EZALUG0503 can be use with maximum rating of 50 A.
(2) EZALUG1002 and EZALUG1003 can be use with maximum rating of 100 A.

LVED212091EN.indb 24 16-4-13 下午4:11

Power connections and insulation of live parts 100-250AF

PB101858-32

Spreader.

PB101873-25

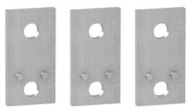

Terminal extensions.

PB101861-23

Phase barriers for EZC100.

PB101875-15

Phase barriers for EZC250/ EZCV250.

PB104906

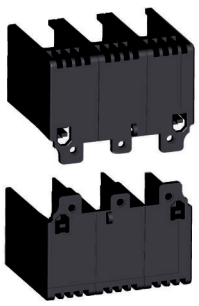

Terminal shield for EZC100.

PB101874-25

Terminal shield for EZC250/EZCV250.

Spreaders

Increase the pitch of the circuit breaker terminals:

- EZC100 from 25 mm to 35 mm
- EZC250/EZCV250 from 35 mm to 45 mm.

Terminal extensions

Additional terminal extensions are available for EZC250/EZCV250 at 35 mm pitch.

DB116398

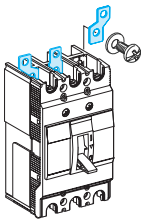

DB116399

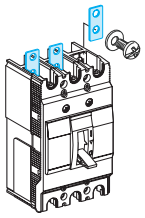

Designation	Cat. no.	
	EZC100	EZC250/EZCV250
Spreaders for 3-pole breaker (set of 3)	EZASPDR3P	EZESPDR3P
Spreaders for 4-pole breaker (set of 4)	EZASPDR4P	EZESPDR4P
Terminal extension for 3-pole breaker (set of 3)	-	EZETEX
Terminal extension for 4-pole breaker (set of 4)	-	EZETEX4P

Phase barriers

- Safety accessories for maximum insulation at the power connection points.
- Usable with all other connection accessories, except terminal shields.
- Each breaker is delivered with a set of phase barriers (1 for 2 poles, 2 for 3 poles and 3 for 4 poles breaker).
- Additional set of phase barriers available for insulation between outgoings or between 2 side by side mounted breakers.

DB116400

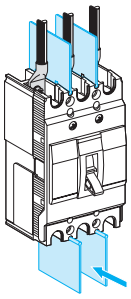

DB116401

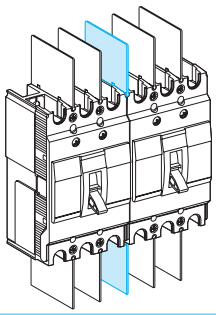

Designation	Cat. no.	
	EZC100	EZC250/EZCV250
Phase barriers for 60 mm depht (set of 2)	EZAFASB2	EZEFASB2
Phase barriers for 68 mm depht (set of 3)	-	EZEFASB3N

Terminal shields

- Insulating accessory used for protection against direct contacts with power circuit connections. It provides a degree of protection of IP20 and a mechanical resistance of IK07.
- The long terminal shield is used with front cable or isolated busbar connections.
- Designed for 3-pole EZC100, 3, 4-pole EZC250/EZCV250.

DB402709

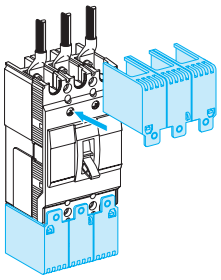

Designation	Cat. no.	
	EZC100	EZC250/EZCV250
Terminal shield 3P, 60 mm depth (set of 2)	EZATSHD3P	EZETSHD3P
Terminal shield 3P, 68 mm depth (set of 2)	-	EZETSHD3PN
Terminal shield 4P, 60 mm depth (set of 2)	EZATSHD4P	-
Terminal shield 4P, 68 mm depth (set of 2)	-	EZETSHD4PN

LVED212091EN.indb 25 16-4-13 下午4:12

DIN rail adaptor, padlocking, sealing screws 100-250AF

PB101870-10

PB101917-15

PB101869-22

Padlocking device for EZC100.

PB101920-20

Padlocking device for EZC250/EZCV250.

DIN rail adaptor

Breaker mounting on a DIN rail is possible by using special adaptator (EZC100 only).
Number of adaptators:
- one for two 1P, or one 2P or one 3P
- two for one 4P.

DB116403

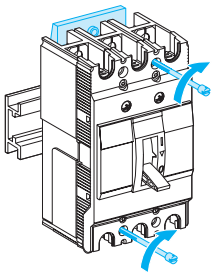

Mounting on DIN rail (optional).

Designation	Cat. no.	
	EZC100	EZC250/EZCV250
Din rail adaptor	EZADINR	-

Padlocking system

Locking in the OFF position guarantees isolation as per IEC 60947-2.
Padlocking system can receive:
- up to 2 padlocks Ø 5 mm (padlocks not supplied) for EZC100
- up to 3 padlocks Ø 8 mm for EZC250/EZCV250 (padlocks not supplied).

DB116404

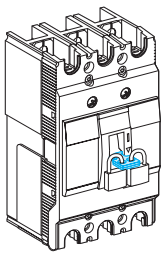

Toggle locking using a removable device: for EZC100

DB116405

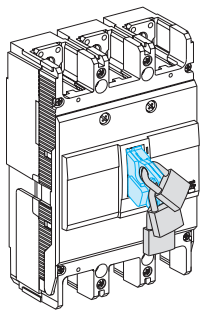

for EZC250/EZCV250

Designation	Cat. no.	
	EZC100	EZC250/EZCV250
Padlocking system	EZALOCK	-
Padlocking system for EZC250-3P	-	EZELOCK
Padlocking system for EZC250-4P and EZCV250-3/4P	-	EZELOCKN

LVED212091EN.indb 26 16-4-13 下午4:12

Accessories and auxiliaries of EZC400-630

Connection of devices

Fixed circuit breakers are designed for standard front connection using bars or cables with lugs.
Cable connectors are available for bare cables. Rear connection is also possible.

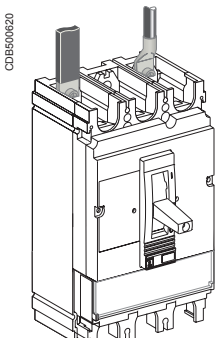

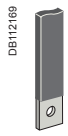

Insulated bar.

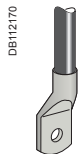

Small lug for copper cables.

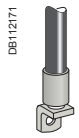

Small lug for Al cables.

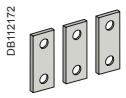

Straight terminal extensions.

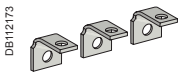

Right-angle terminal extensions

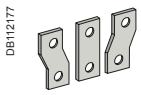

Spreaders.

Front connection

Bars or cables with lugs

Standard terminals

EasyPact EZC400 to 630 come with terminals comprising snap-in nuts with screws:
- EasyPact EZC400/630: M10 nuts and screws.

These terminals may be used for:
- direct connection of insulated bars or cables with lugs
- terminal extensions.

Interphase barriers or terminal shields are recommended. They are mandatory for certain connection accessories (in which case the interphase barriers are provided).

Bars

When the switchboard configuration has not been tested, insulated bars are mandatory.

Maximum size of bars

EasyPact EZC circuit breaker		400/630
Without spreaders	pitch (mm)	45
	maximum bar size (mm)	32 x 8
With spreaders	pitch (mm)	52.5
	maximum bar size (mm)	40 x 6

Crimp lugs

There are two modules of lugs, for aluminium and copper cables.
Interphase barriers or long terminal shields must be used with narrow lugs. The lugs are supplied with interphase barriers.

EasyPact EZC circuit breaker		400/630
Copper cables	size (mm²)	240, 300
	crimping	hexagonal barrels or punching
Aluminium cables	size (mm²)	240, 300
	crimping	hexagonal barrels

Terminal extensions

Extensions with anti-rotation ribs can be attached to the standard terminals to provide numerous connection possibilities in little space:
- straight terminal extensions
- right-angle terminal extensions

Spreaders

Spreaders may be used to increase the pitch:
- EZC400/630: the 45 mm pitch can be increased to 52 or 70 mm.

Bars, cable lugs or cable connectors can be attached to the ends.

Pitch (mm) depending on the type of spreader

EasyPact EZC circuit breaker	EZC400 to 630
Without spreaders	45
With spreaders	52.5 or 70

LVED212091EN.indb 27
16-4-13 下午4:12

Accessories and auxiliaries of EZC400-630

Connection of devices

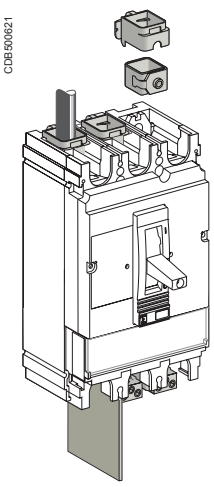

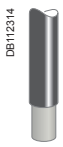

Bare cable.

1-cable connector for EZC400/630.

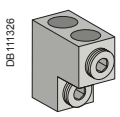

2-cable connector for EZC400/630.

Bare cables

Bare-cable connectors may be used for both copper and aluminium cables.

1-cable connectors for EasyPact EZC400 to 630

The connectors are screwed directly to the device terminals.

Maximum size of cables depending on the type of connector

EasyPact EZC circuit breaker		400	630
Aluminium connectors	2 cables 35 to 240 mm²	■	■
	35 to 300 mm²	■	■

Four positions.

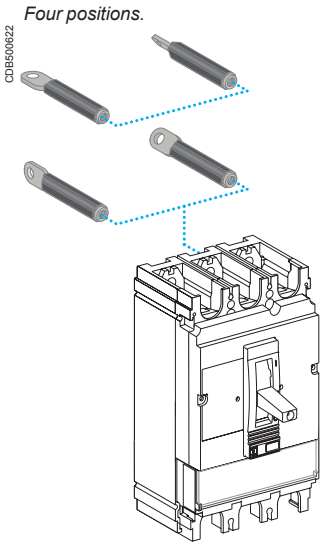

Two lengths.

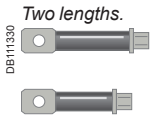

Rear connection

Device mounting on a backplate with suitable holes enables rear connection.

Bars or cables with lugs

Rear connections for bars or cables with lugs are available in two lengths. Bars may be positioned flat, on edge or at 45° angles depending on how the rear connections are positioned.

The rear connections are simply fitted to the device connection terminals. All combinations of rear connection lengths and positions are possible on a given device.

LVED212091EN.indb 28 16-4-13 下午4:12

Accessories and auxiliaries of EZC400-630

Selection of auxiliaries

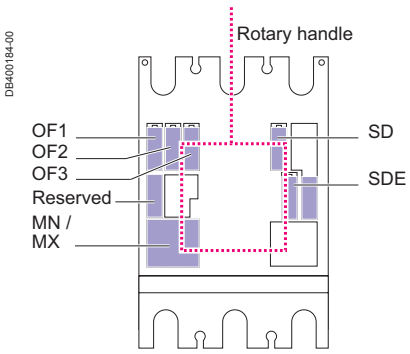

EasyPact EZC400/630

Standard

All EasyPact EZC400/630 circuit breakers and switch-disconnectors have slots for the electrical auxiliaries listed below.

5 indication contacts

- 3 ON/OFF (OF3)
- 1 trip indication (SD)
- 1 fault-trip indication (SDE)

1 remote-tripping release

- either 1 MN undervoltage release
- or 1 MX shunt release.

All these auxiliaries can be installed with a rotary handle.

LVED212091EN.indb 29 16-4-13 下午4:12

Accessories and auxiliaries of EZC400-630

Indication contacts

One contact model provides circuit-breaker status indications (OF - SD - SDE).

Indication contacts.

These common-point changeover contacts provide remote circuit-breaker status information.
They can be used for indications, electrical locking, relaying, etc.
They comply with the IEC 60947-5 international recommendation.

Functions

Breaker-status indications, during normal operation or after a fault
A single type of contact provides all the different indication functions:
■ OF (ON/OFF) indicates the position of the circuit breaker contacts
■ SD (trip indication) indicates that the circuit breaker has tripped due to:
□ an overload
□ a short-circuit
□ an earth fault (Vigi)
□ operation of a voltage release
□ operation of the “push to trip” button
□ disconnection when the device is ON.
The SD contact returns to de-energised state when the circuit breaker is reset.
■ SDE (fault-trip indication) indicates that the circuit breaker has tripped due to:
□ an overload
□ a short-circuit

Installation

■ OF, SD, SDE functions: a single type of contact provides all these different indication functions, depending on where it is inserted in the device. The contacts clip into slots behind the front cover of the circuit breaker.

Electrical characteristics of auxiliary contacts

Contacts			Standard				Low level			
Types of contacts			**All**				**OF, SD, SDE**			
Rated thermal current (A)			6				5			
Minimum load			100 mA at 24 V DC				1 mA at 4 V DC			
Utilisation cat. (IEC 60947-5-1)			AC12	AC15	DC12	DC14	AC12	AC15	DC12	DC14
Operational current (A)	24 V	AC/DC	6	6	6	1	5	3	5	1
	48 V	AC/DC	6	6	2.5	0.2	5	3	2.5	0.2
	110 V	AC/DC	6	5	0.6	0.05	5	2.5	0.6	0.05
	220/240 V	AC	6	4	-	-	5	2	-	-
	250 V	DC	-	-	0.3	0.03	5	-	0.3	0.03
	380/440 V	AC	6	2	-	-	5	1.5	-	-

LVED212091EN.indb 30 16-4-13 下午4:12

Accessories and auxiliaries of EZC400-630

Remote tripping

DB125550

MX or MN voltage release.

DB115605

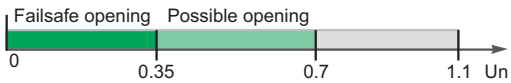

Opening conditions of the MN release.

DB115606

Closing conditions of the MN release.

PB103752-32

MN release with a time-delay unit.

DB115607

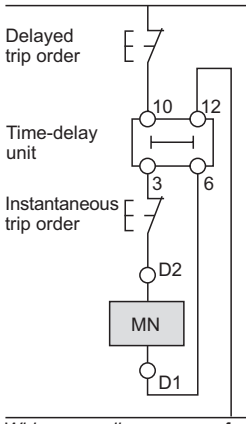

Wiring diagram for emergency-off function with MN + time-delay unit.

DB115608

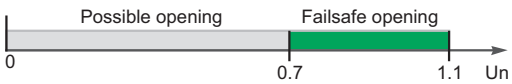

Opening conditions of the MX release.

***Note**: circuit breaker opening using an MN or MX release must be reserved for safety functions. This type of tripping increases wear on the opening mechanism. Repeated use reduces the mechanical endurance of the circuit breaker by 50 %.*

MN undervoltage release

- This release trips the circuit breaker when the control voltage drops below a tripping threshold
- The tripping threshold is between 0.35 and 0.7 times the rated voltage
- Circuit breaker closing is possible only if the voltage exceeds 0.85 times the rated voltage.

Characteristics

Power supply	V AC	50/60 Hz: 24 - 48 - 100/130 - 200/240
		50 Hz: 380/415 60 Hz: 208/277
	V DC	12 - 24 - 30 - 48 - 60 - 125 -250
Operating threshold	Opening	0.35 to 0.7 Un
	Closing	0.85 Un
Operating range		0.85 to 1.1 Un
Consumption (VA or W)		Pick-up: 10 - Hold: 5
Response time (ms)		50

Time-delay unit for an MN release

A time delay unit for the MN release eliminates the risk of nuisance tripping due to a transient voltage dip lasting ⩽ 200 ms. For shorter micro-outages, a system of capacitors provides temporary supply to the MN at U > 0.7 to ensure non tripping.
The correspondence between MN releases and time-delay units is shown below.

Power supply	Corresponding MN release
Unit with fixed delay 200 ms	
48 V AC	48 V DC
220 / 240 V AC	250 V DC
Unit with adjustable delay (0.5s, 0.9s, 1.5s, 3s)	
48 - 60 V AC/DC	48 V DC
100 - 130 V AC/DC	125 V DC
220 - 250 V AC/DC	250 V DC

MX shunt release

The MX release opens the circuit breaker via an impulse-type (⩾ 20 ms) or maintained order.

Opening conditions

When the MX release is supplied, it automatically opens the circuit breaker. Opening is ensured for a voltage U ⩾ 0.7 x Un.

Characteristics

Power supply	V AC	50/60 Hz: 24 - 48 - 100/130 - 200/240
		50 Hz: 380/415 60 Hz: 208/277
	V DC	12 - 24 - 30 - 48 - 60 - 125 -250
Operating range		0.7 to 1.1 Un
Consumption (VA or W)		Pick-up: 10
Response time (ms)		50

Circuit breaker control by MN or MX

When the circuit breaker has been tripped by an MN or MX release, it must be reset before it can be reclosed.
MN or MX tripping takes priority over manual closing.
In the presence of a standing trip order, closing of the contacts, even temporary, is not possible.
Connection using wires up to 1.5mm² to integrated terminal blocks.

LVED212091EN.indb 31
16-4-13 下午4:12

Accessories and auxiliaries of EZC400-630

Rotary handles escutcheons and protection collars

There are two types of rotary handle:
- direct rotary handle
- extended rotary handle.

CPB100628

EasyPact EZC400 with a rotary handle.

Direct rotary handle

Standard handle

Degree of protection IP40, IK07.
The direct rotary handle maintains:
- visibility of and access to trip-unit settings
- suitability for isolation
- indication of the three positions O (OFF), I (ON) and tripped
- access to the "push to trip" button.

Device locking
The rotary handle facilitates circuit-breaker locking.
- Padlocking:
  - standard situation, in the OFF position, using 1 to 3 padlocks, shackle diameter 5 to 8 mm, not supplied

CPB100629

EasyPact EZC400 with an extended rotary handle installed at the back of a switchboard, with the keylock option and key.

Extended rotary handle

Degree of protection IP54, IK08.
The extended rotary handle makes it possible to operate circuit breakers installed at the back of switchboards, from the switchboard front.
It maintains:
- visibility of and access to trip-unit settings
- suitability for isolation
- indication of the three positions O (OFF), I (ON) and tripped.

Device and door padlocking
Padlocking locks the circuit-breaker handle and disables door opening:
- standard situation, in the OFF position, using 1 to 3 padlocks, shackle diameter 5 to 8 mm, not supplied

Parts of the extended rotary handles
- A unit that replaces the front cover of the circuit breaker (secured by screws).
- An assembly (handle and front plate) on the door that is always secured in the same position, whether the circuit breaker is installed vertically or horizontally.
- An extension shaft that must be adjusted to the distance. The min/max distance between the back of circuit breaker and door is:
  - 209…600 mm for EasyPact EZC 400/630.

CPB100630

Manual source-changeover systems

An additional accessory interlocks two devices with rotary handles to create a source-changeover system. Closing of one device is possible only if the second is open.
This function is compatible with direct or extended rotary handles.
Up to three padlocks can be used to lock in the OFF or ON position.

Escutcheons are an optional feature mounted on the switchboard door. They increase the degree of protection to IP40, IK07. Protection collars maintain the degree of protection, whatever the position of the device (connected, disconnected).

IP40 escutcheons for fixed devices

There are three types of escutcheon with a gasket which are screwed to the door cut-out:
- three escutcheons for all control types (toggle, handle or motor mechanism)
- a wide model for Vigi modules that can be combined with the above.

LVED212091EN.indb 32 16-4-13 下午4:12

Accessories and auxiliaries of EZC400-630

Locks and sealing accessories

DB400025

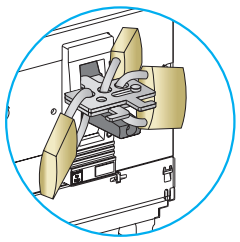

DB400026

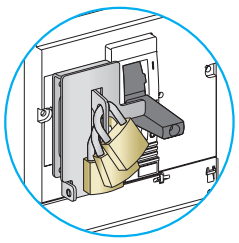

Toggle locking using padlocks and an accessory:
Removable device
Fixed device attached to the case.

DB400027

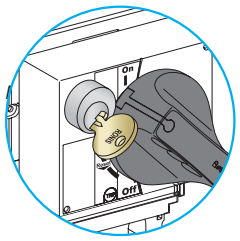

Rotary-handle locking using a keylock.

CDB500623

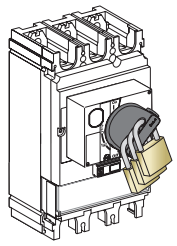

CDB500624

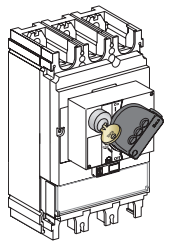

Rotary-handle locking using a padlock or a keylock.

DB115033

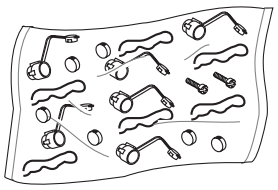

Sealing accessories.

Locks

Locking in the OFF position guarantees isolation as per IEC 60947-2. Padlocking systems can receive up to three padlocks with shackle diameters ranging from 5 to 8 mm (padlocks not supplied). Certain locking systems require an additional accessory.

Control device	Function	Means	Required accessories
Toggle	Lock in OFF position	Padlock	Removable device
	Lock in OFF or ON position	Padlock	Fixed device
Direct rotaryStandard handle	Lock in OFF position OFF or ON position (1)	Padlock	-
		Keylock	Locking device + keylock
Extended rotary handle	Lock in OFF position OFF or ON position (1) with door opening prevented (2)	Padlock	-
	Lock in OFF position	Padlock	UL508 control accessory
	OFF or ON position (1) inside the switchboard	Keylock	Locking device + keylock

(1) Following a simple modification of the mechanism.
(2) Unless door locking has been voluntarily disabled.

Sealing accessories

Toggle control	CDB500625 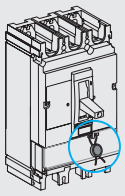
Rotary handle	CDB500626 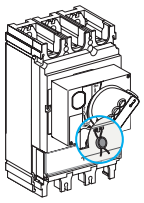

LVED212091EN.indb 33
16-4-13 下午4:12

LVED212091EN.indb 34 16-4-13 下午4:12

Busbars

Presentation *II*
Functions and characteristics *A-1*

Introduction **B-2**

Busbars characteristics **B-4**

Main busbars and extension **B-5**

Accessories **B-6**

Dimensions
Busbar EZB250 B-7
Busbars EZB400/630 B-8
EasyPact EZC or Compact NSX branch extensions layout B-9

Installation guide *C-1*
Catalogue numbers *D-1*

LVED212091EN.indb 1 16-4-13 下午4:12

Introduction

DB116419.eps

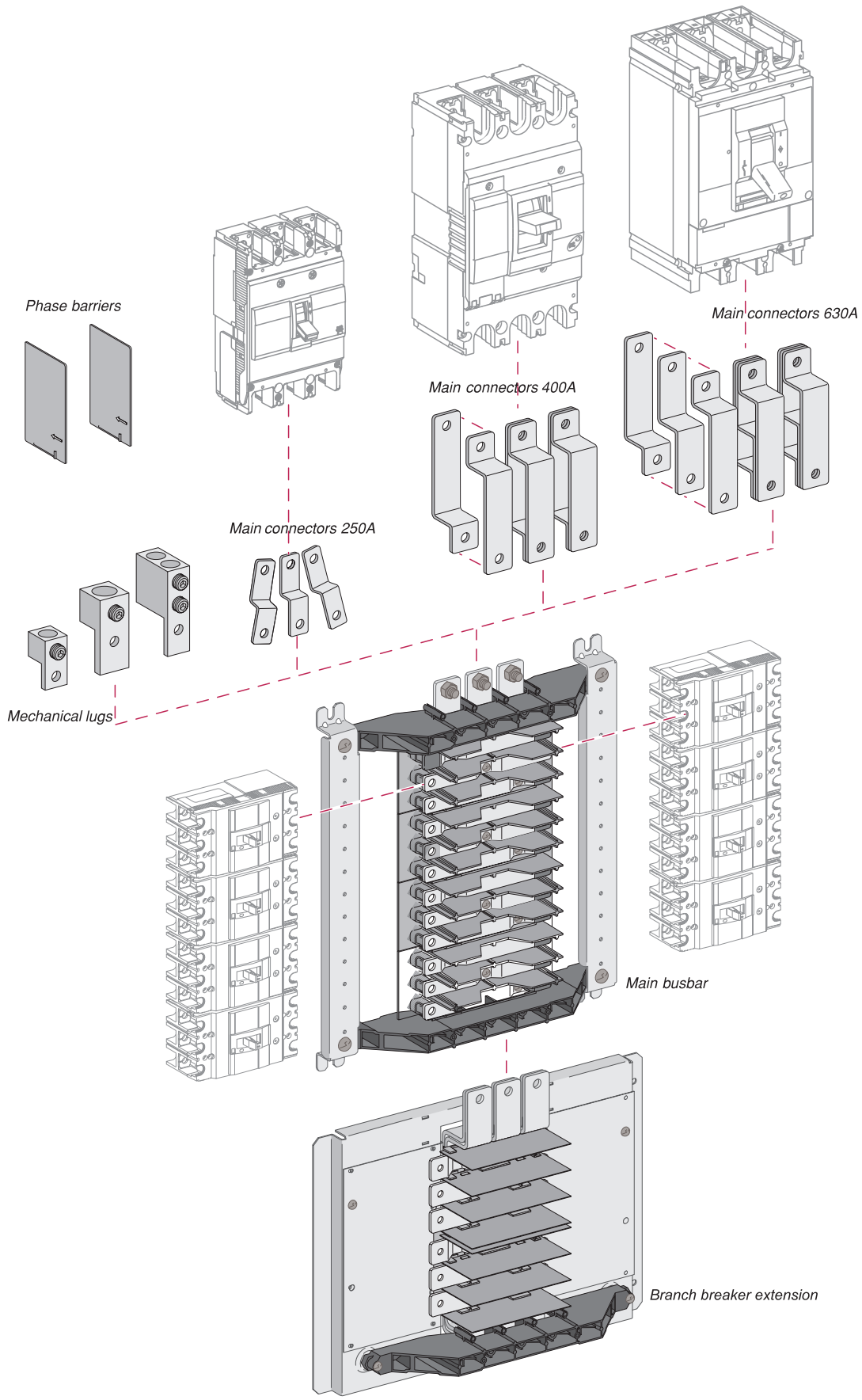

LVED212091EN.indb 2
16-4-13 下午4:12

The EasyPact EZC Busbar - engineered and certified together with the EasyPact EZC MCCB to provide superior performance, flexibility and value. Simply the best solution for your distribution panel needs:

■ available for 250 A, 400 A or 630 A main incoming current

■ available for 4, 6, 8, 10 or 12 Ways (3 poles) EasyPact EZC 100 A (max.) outgoing MCCB's

■ 400 A and 630 A systems can accept an additional 2 or 4 EasyPact EZC 250 or Compact NSX250 outgoing MCCB's

■ designed and tested to meet IEC 60439-1 requirements

■ completely assembled in ISO certified facility for easy installation into locally made enclosures.

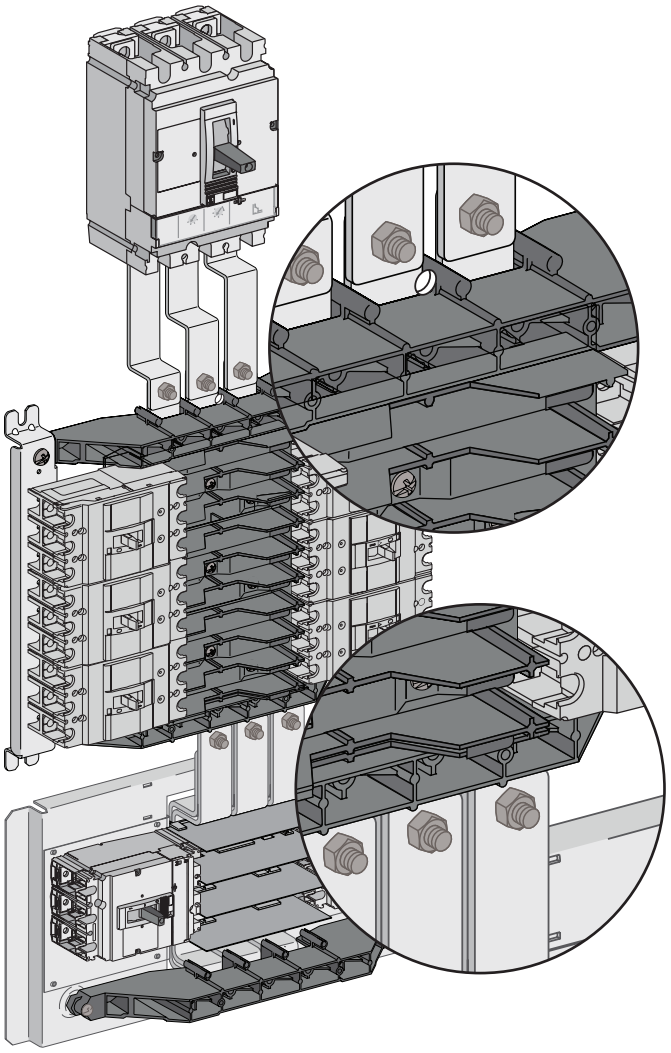

Premium Materials make a premium busbar system

■ Solid copper busbars and connectors for cool, care-free operation.

■ Electro-tin plating on all busbars and connectors for corrosion resistance in all environments.

■ Fiberglass reinforced nylon bus supports for strength and dimensional stability.

■ Molded thermoplastic phase barriers to maintain alignment and ensure electrical isolation between phases.

LVED212091EN.indb 3 16-4-13 下午4:12

Busbars characteristics

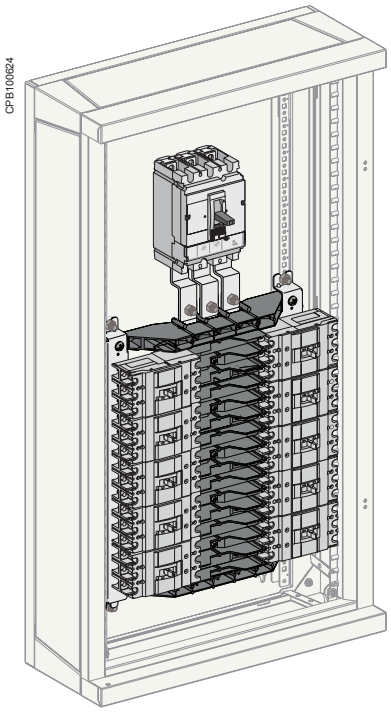

Enclosed 10 ways Busbar 250 A with 250 A main incomer.

Compliance with standards

The EasyPact EZC Busbar System is designed and certified to meet all international requirements specified in IEC 60439-1 relating to construction of Low Voltage switchgear and controlgear assemblies, including:

- verification of temperature - rise limits
- verification of dielectric properties
- verification of short-circuit withstand strength
- verification of clearances and creepage distances.

In addition, the system has been type-tested in ASTA labs to confirm the short-circuit and short-time withstand ratings.

EasyPact EZC Busbar System			EZB250					EZB400					EZB630				
Number of ways			4	6	8	10	12	4	6	8	10	12	4	6	8	10	12
Numbers of outgoings (EasyPact EZC 100)		1P	12	18	24	30	36	12	18	24	30	36	12	18	24	30	36
		2P	6	8	12	14	18	6	8	12	14	18	6	8	12	14	18
		3P	**4**	**6**	**8**	**10**	**12**	**4**	**6**	**8**	**10**	**12**	**4**	**6**	**8**	**10**	**12**
Extension for EZ/NSX breakers			No extension					Yes (2 or 4 Ways)					Yes (2 or 4 Ways)				
Electrical characteristics																	
Rated incoming current (A)			**250**					**400**					**630**				
Rated operational voltage (V)	AC 50/60 Hz		550					550					550				
Rated insulation voltage (V)			690					690					690				
Breaking capacity			Refer to cascading tables page C-18														
Rated short-time withstand current (kA rms)	1 sec.		30					40					40				
Dimensions																	
Dimensions H x W x D (mm)	4 Ways		268.5 x 416 x 82.5					290 x 416 x 107					290 x 416 x 107				
	6 Ways		343.5 x 416 x 82.5					365 x 416 x 107					365 x 416 x 107				
	8 Ways		418.5 x 416 x 82.5					440 x 416 x 107					440 x 416 x 107				
	10 Ways		493.5 x 416 x 82.5					515 x 416 x 107					515 x 416 x 107				
	12 Ways		568.5 x 416 x 82.5					590 x 416 x 107					590 x 416 x 107				

LVED212091EN.indb 4 16-4-13 下午4:12

Main busbars and extension

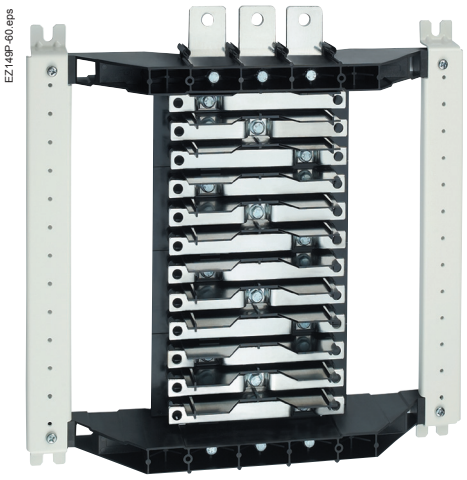

EasyPact EZC Busbar EZB250W08.

Main busbar

The core of the EasyPact EZC Busbar System includes the main busbars and outgoing connectors for EasyPact EZC MCCB's.

Designation	Cat. no.		
Type	EZB250	EZB 400	EZB630
Main busbar current rating	250 A	400 A	630 A
Number of ways			
4 ways	EZB250W04	EZB400W04	EZB630W04
6 ways	EZB250W06	EZB400W06	EZB630W06
8 ways	EZB250W08	EZB400W08	EZB630W08
10 ways	EZB250W10	EZB400W10	EZB630W10
12 ways	EZB250W12	EZB400W12	EZB630W12

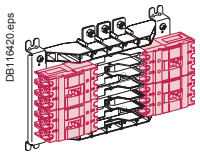

4 ways with 3 poles.

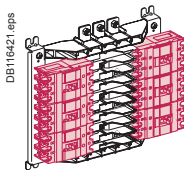

6 ways with 3 poles.

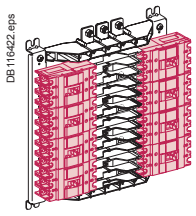

8 ways with 3 poles.

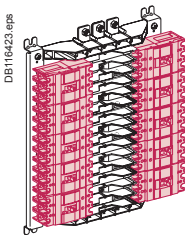

10 ways with 3 poles.

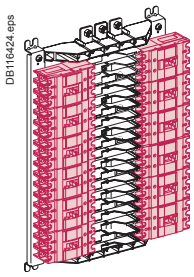

12 ways with 3 poles.

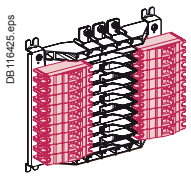

6 ways with 1 pole.

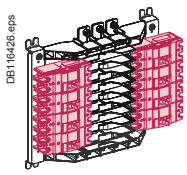

6 ways with 1 pole.

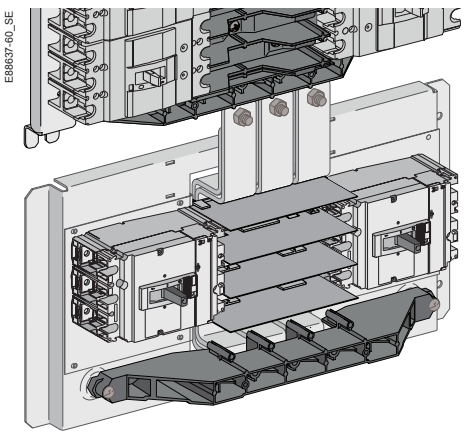

EasyPact EZC and Compact NSX branch breaker extension 2 ways.

EasyPact EZC and Compact NSX branch extension

For applications calling for larger than 100 A outgoing MCCB's, EasyPact EZC Busbar rated 400 A and 630 A can accept the 2 ways or 4 ways EasyPact EZC and Compact NSX branch extension for up to four additional 250 A max. outgoing circuits. EasyPact EZC and Compact NSX branch extensions simply connect directly to the terminals provided on the EZB400 and EZB630 EasyPact EZC Busbar.

Designation	Cat. no.
EZ/NSX/NB branch breaker extension	
2 ways	EZBNS2
4 ways	EZBNS4

LVED212091EN.indb 5 16-4-13 下午4:12

Accessories

E88301-50.eps

Main incoming connections

Incoming cables with crimped lugs can connect directly to the terminals provided.

DB116427.eps

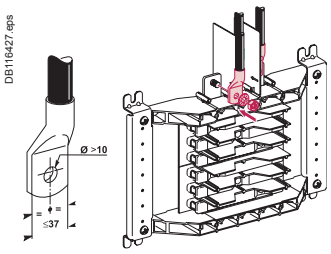

EZ117P-60_SE

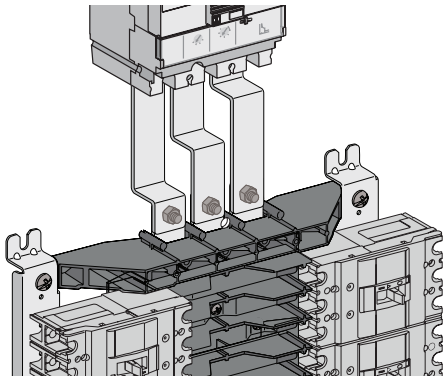

Main connectors

For installing a main disconnect device (EasyPact EZC or Compact NSX MCCB or INS switch) ahead of EasyPact EZC Busbar, use the tin-plated copper connector kits below.

Designation	Cat. no.		
Main Busbar current rating	**250 A**	**400 A**	**630 A**
Main disconnect device for EasyPact EZC or Compact NSX or INS switch	**EZB250MCNS**	**EZB400MCNS**	**EZB630MCNS**

CDB500620_00

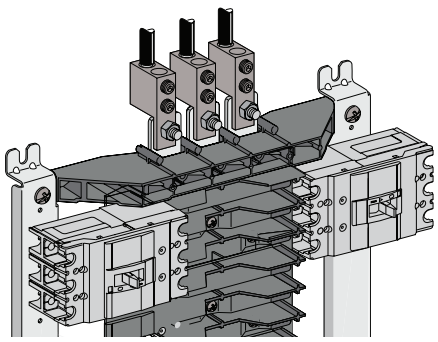

Mechanical lugs

For incoming cables without crimped lugs, use the mechanical lug kits below. Each kit contains three aluminium lugs suitable for copper or aluminium cables.

Designation	Cat. no.		
Main Busbar current rating	**250 A**	**400 A**	**630 A**
Incoming cable size	16-150 mm²	35-300mm²	25-240 mm² 2 cables per phase
Lug kit	**EZB250MLUG**	**EZB400MLUG**	**EZB630MLUG**

DB116428.eps

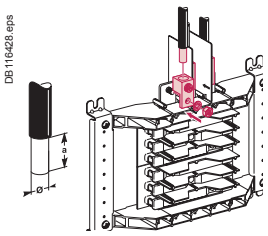

DB116429.eps

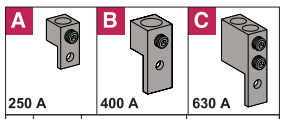

	a	Ø	↻
A	26	16-150 mm²	31 Nm
B	35	35-300 mm²	56 Nm
C	30	25-240 mm²	56 Nm
	60	25-240 mm²	56 Nm

E88310-54_SE

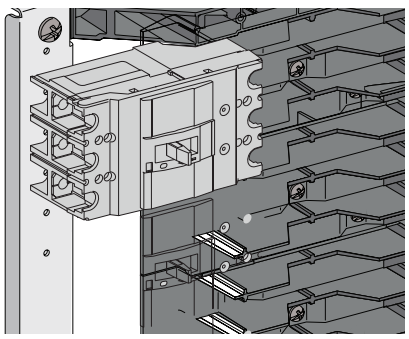

Connector caps

Connector caps are available to isolate the ends of connectors in positions where branch breakers are not installed.
Mounting screws are provided for an insulating barrier (locally provided) to cover the branch connectors when IP2X finger safety is specified.

Designation	Cat. no.
Connector caps (set of 3)	
Caps for 100 A outgoings	**EZB100CAP**
Caps for 250 A outgoings	**EZB250CAP**

DB116430.eps

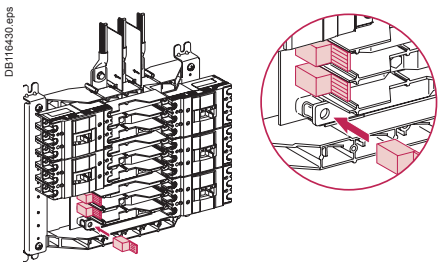

Schneider Electric

LVED212091EN.indb 6 16-4-13 下午4:12

Dimensions

Busbar EZB250

Layout installation EZB250

Panel layout using the EasyPact EZC Busbar is simple using the guides below. In addition to the mounting locations for the busbar and main disconnect components (if required), make note of the minimum clearances required to the top, bottom and sides of the enclosure.

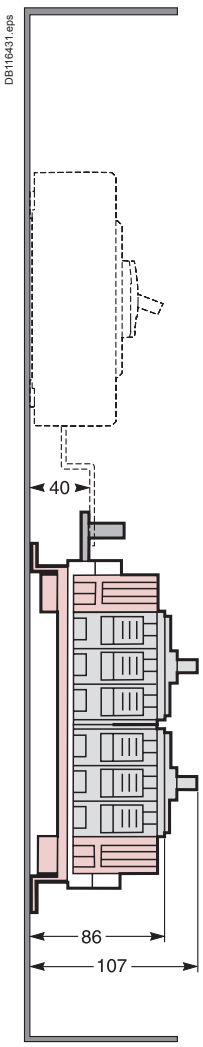

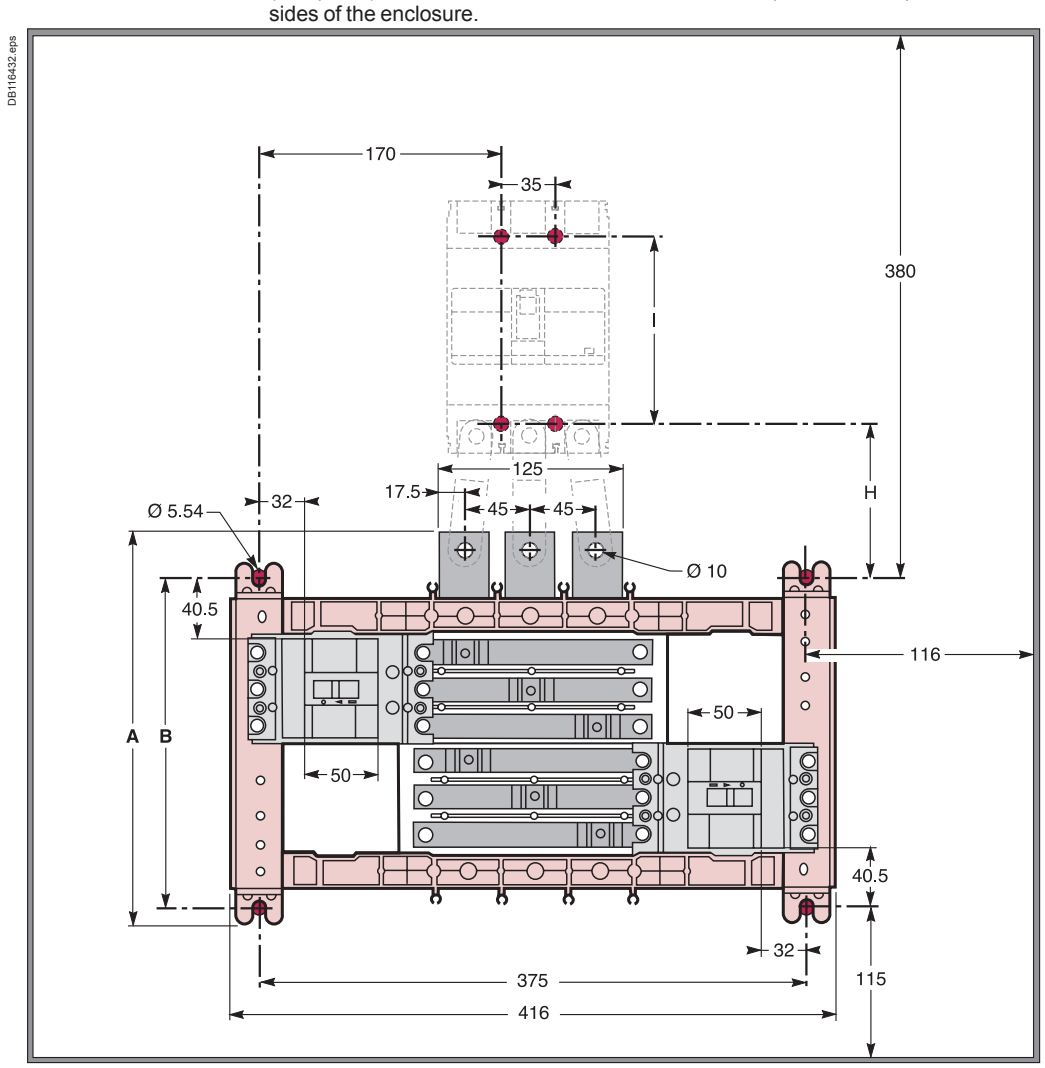

EZB250 - 250 A main busbar rating.

Trim cut-out

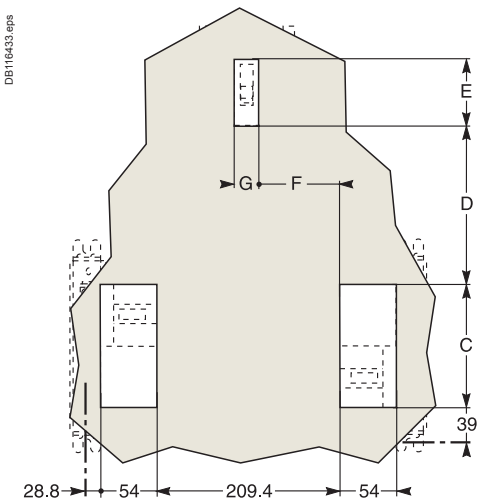

	A	B	C	D	E	F	G	H	I
EZ250 incomer	-	-	-	187.4	52	92.7	24	109.5	126
NS incomer	-	-	-	182.4	76	90.2	29	108	125
4 ways	268.5	225	147	-	-	-	-	-	-
6 ways	343.5	300	222	-	-	-	-	-	-
8 ways	418.5	375	297	-	-	-	-	-	-
10 ways	493.5	450	372	-	-	-	-	-	-
12 ways	568.5	525	447	-	-	-	-	-	-

Dimensions

Busbars EZB400/630

Layout installation EZB400/630

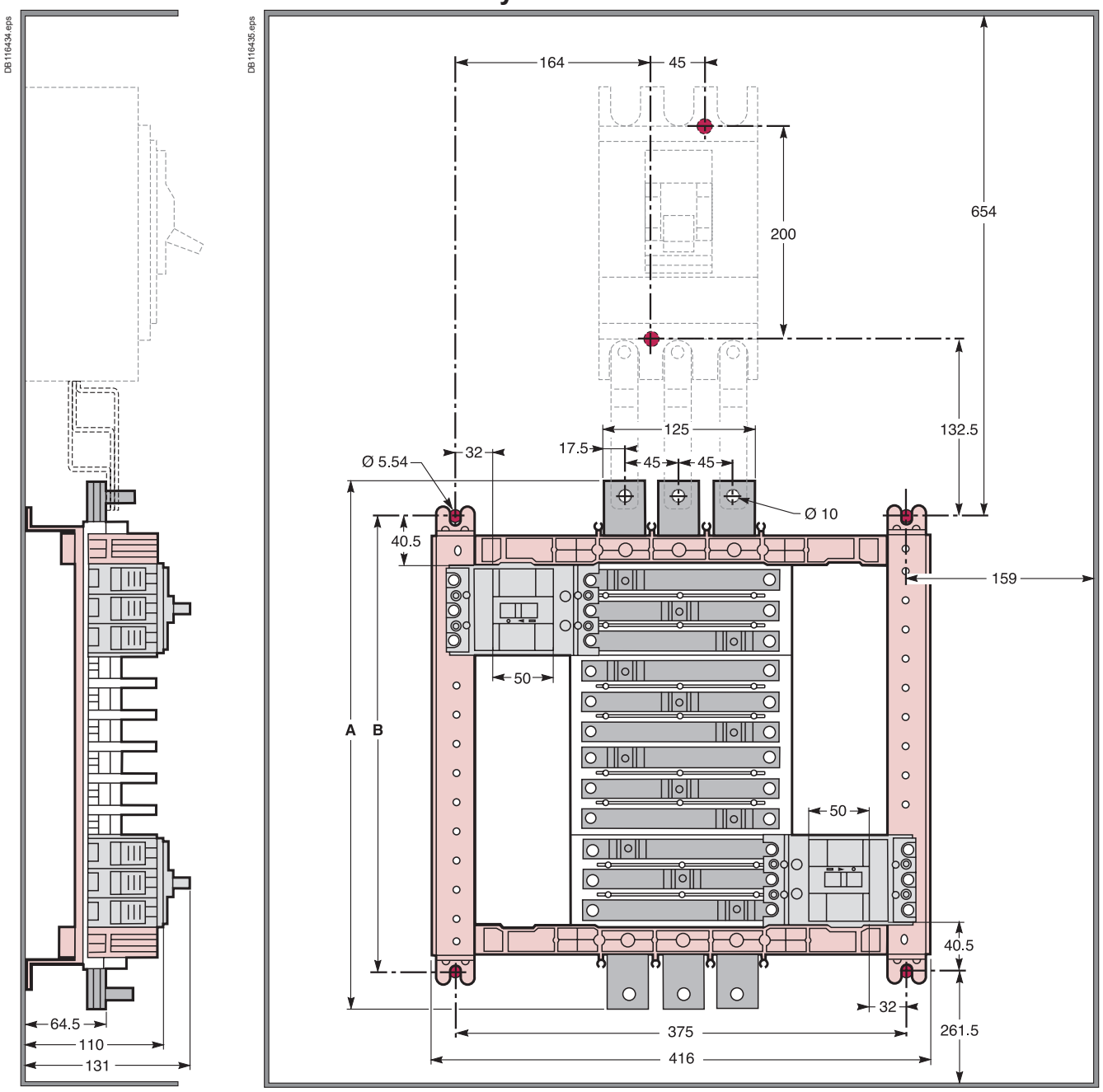

EZB400 and EZB630 - 400 A and 630 A main busbar ratings.

Trim cut-out

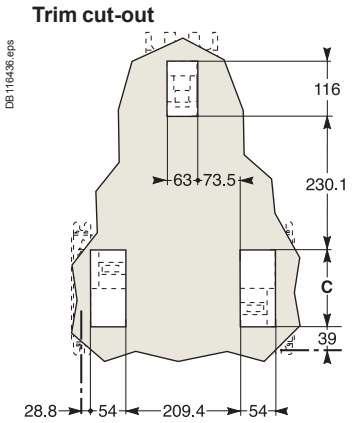

	A	B	C
4 ways	290	225	147
6 ways	365	300	222
8 ways	440	375	297
10 ways	515	450	372
12 ways	590	525	447

Note: *to avoid excess temperature rise on incoming MCCB terminals, panels using 630 A main breaker with these minimum enclosure dimensions require a 7000 mm² ventilation opening (after subtracting effects of screening) at each of the 4 corners of the enclosure.*

Schneider Electric

LVED212091EN.indb 8 16-4-13 下午4:12

Dimensions

EasyPact EZC or Compact NSX branch extensions layout

Layout installation for EasyPact EZC or Compact NSX branch extensions

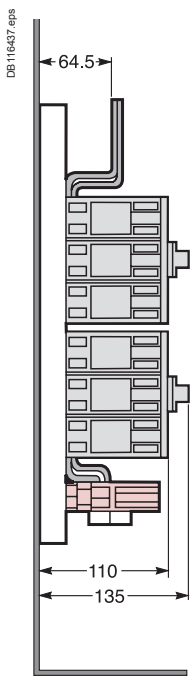

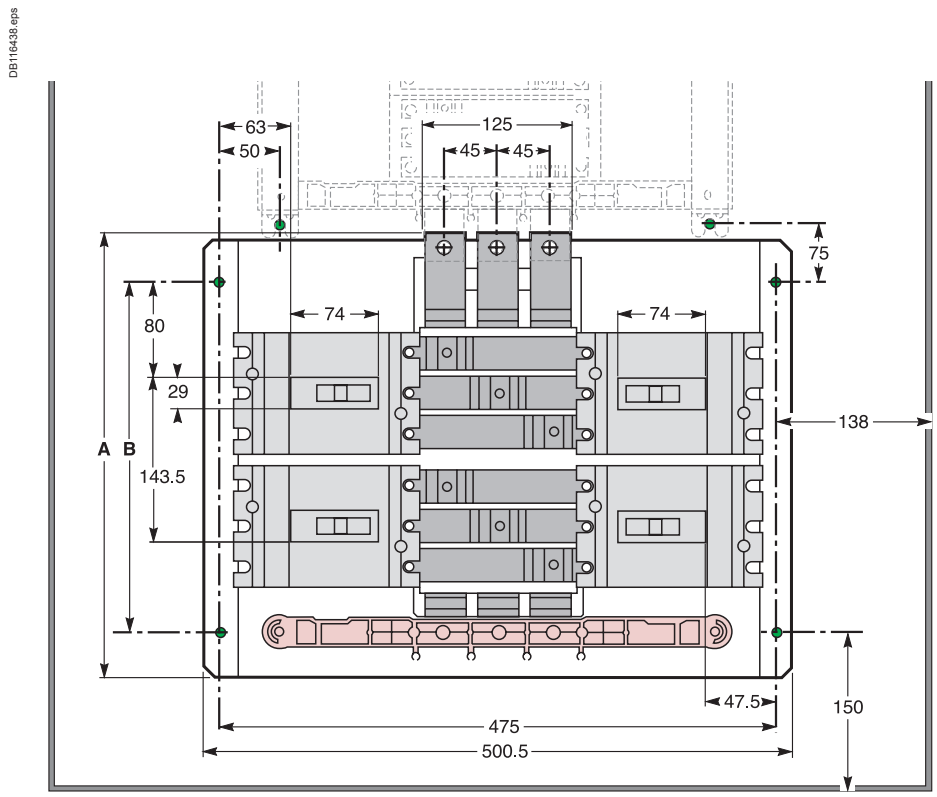

EZBNS2 and EZBNS4 Compact NSX branch breaker extension.

	A	B	C	D	E	F	G	H
EZBNS2	270	175	NA	-	-	-	-	-
EZBNS4	384	275	85.5	-	-	-	-	-
EZC250	-	-	90.5	57.5	24	61	52	249
NSX250	-	-	85.5	78.5	29	45.5	76	232

Trim cut-out

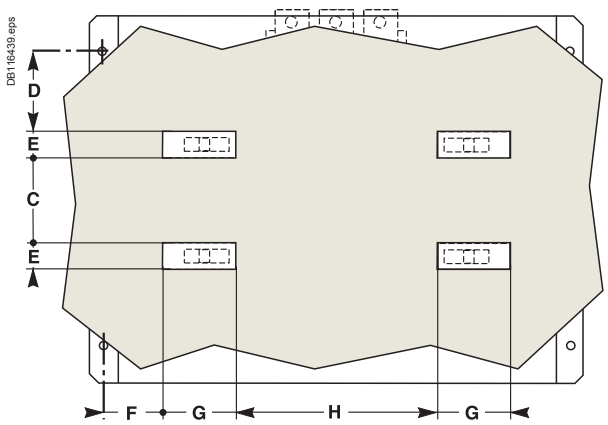

LVED212091EN.indb 9
16-4-13 下午4:12

LVED212091EN.indb 10 16-4-13 下午4:12

Installation guide

Presentation *II*
Functions and characteristics *A-1*
Busbars *B-1*

Dimensions
EasyPact EZC 100 C-2
EasyPact EZC 100 A with plug-in C-4
EasyPact EZC 250 - EZC 250/EZCV 250 C-6
EasyPact EZC 250 A with plug-in C-8
EasyPact EZC 400/630 C-10
EasyPact EZC 100 accessories C-12
EasyPact EZC 250 accessories C-13
EasyPact EZC 400/630 accessories C-14

Safety clearances and minimum distances **C-15**

Temperature derating **C-17**

Tripping curves **C-18**

Current-limiting curves **C-20**

Cascading **C-21**

Cascading tables **C-22**

Motor protection **C-24**

Capacitor protection **C-26**

Catalogue numbers *D-1*

LVED212091EN.indb 1 16-4-13 下午4:12

Dimensions
EasyPact EZC 100

Dimensions

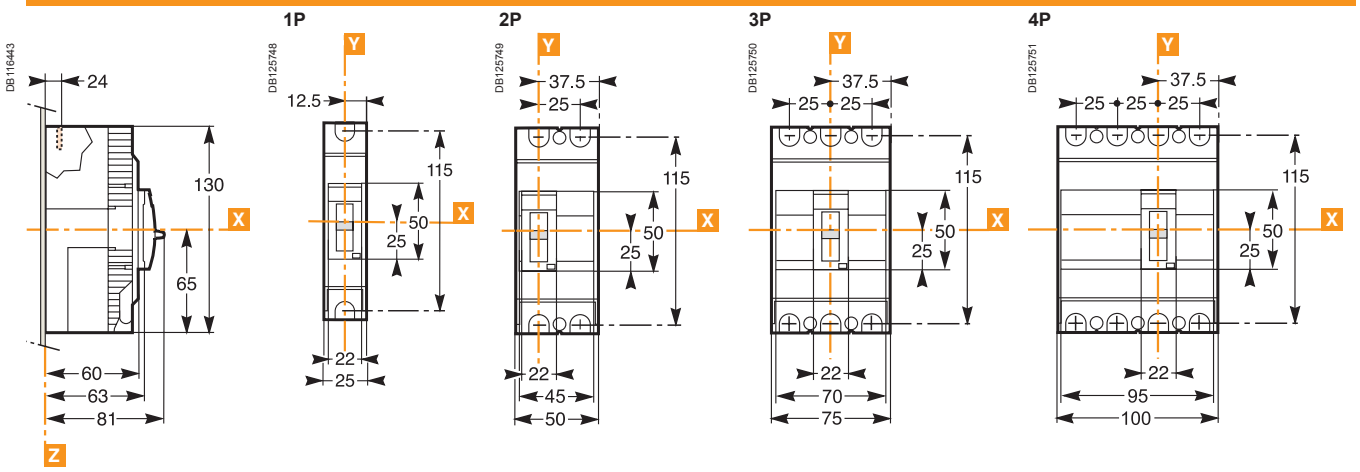

Mounting on plate

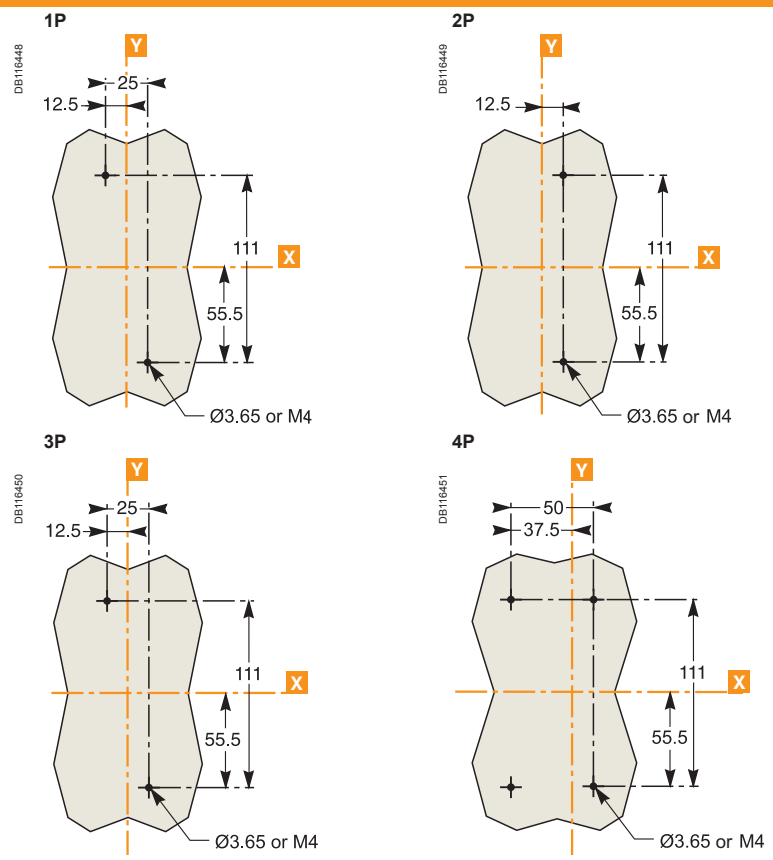

Mounting on DIN rail

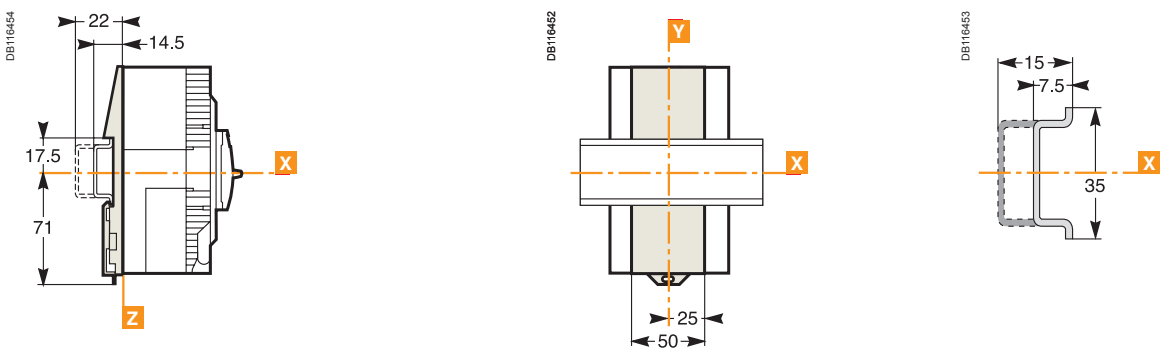

LVED212091EN.indb 2
16-4-13 下午4:12

Door cut-out (small)

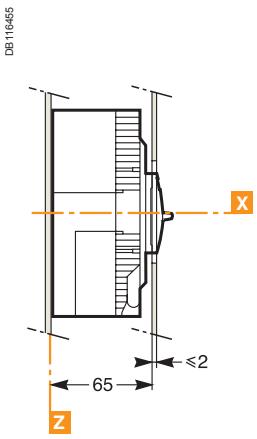

1P, 3P

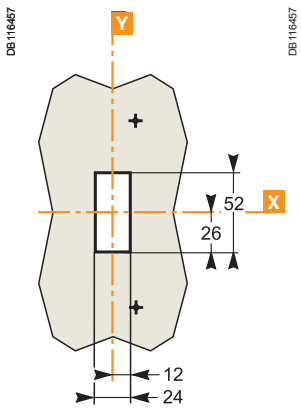

2P

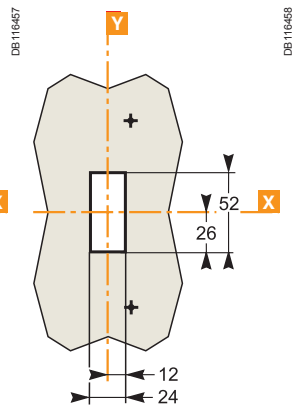

4P

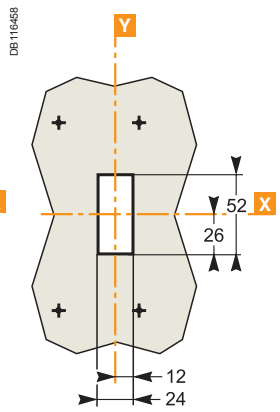

Door cut-out (large)

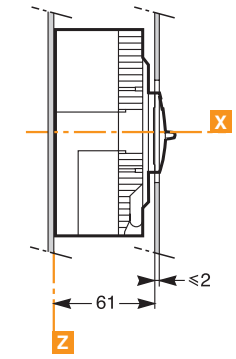

1P

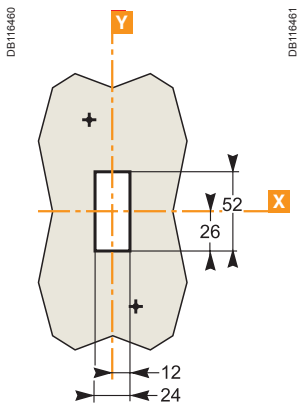

2P

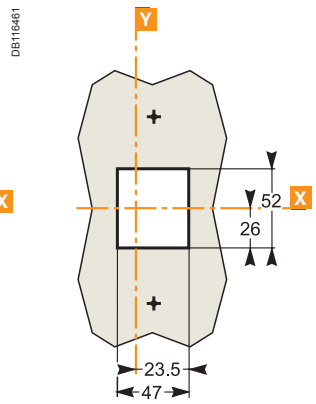

3P

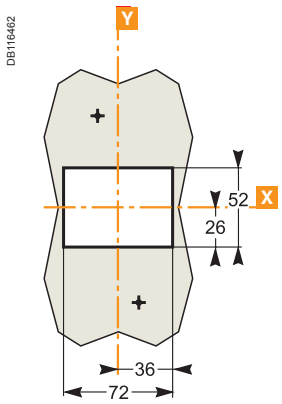

4P

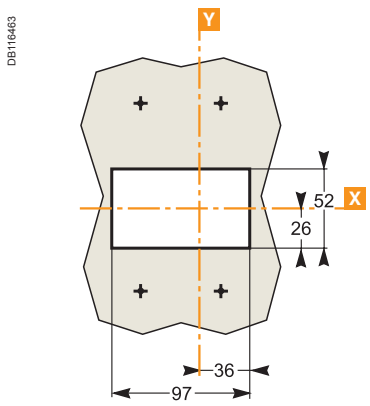

LVED212091EN.indb 3
16-4-13 下午4:12

Dimensions

EasyPact EZC 100 A with plug-in

Dimensions

DB127536

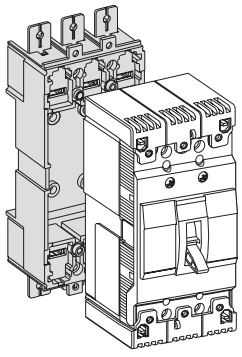

DB127538

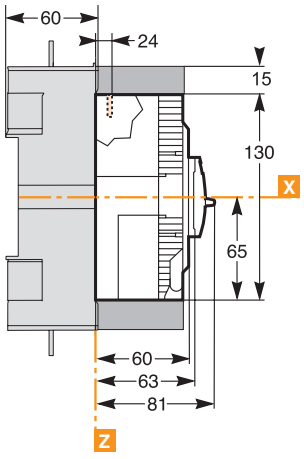

DB127539

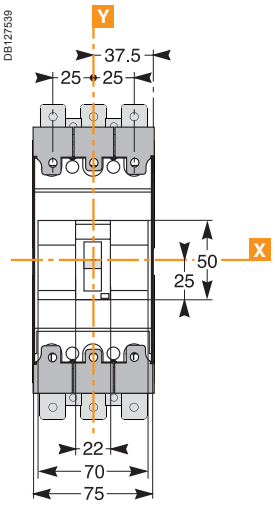

Mounting

Through front panel

DB127541

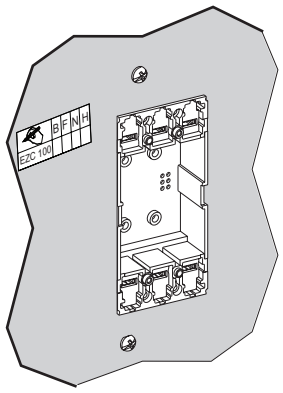

DB127537

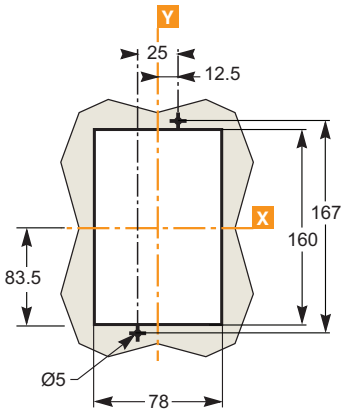

On rail

DB127542

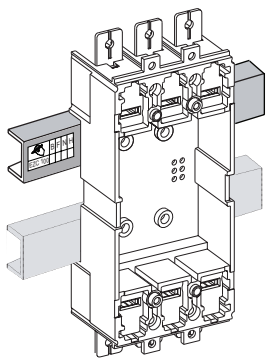

DB127540

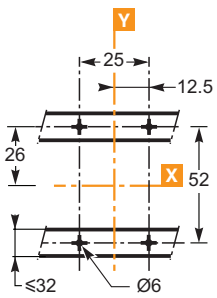

LVED212091EN.indb 4
16-4-13 下午4:12

On backplate

DB127543

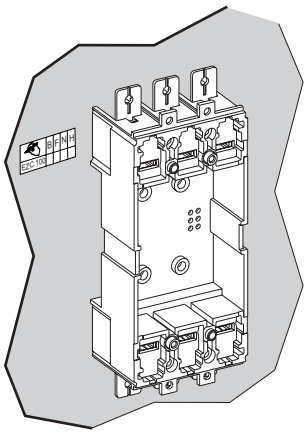

DB127544

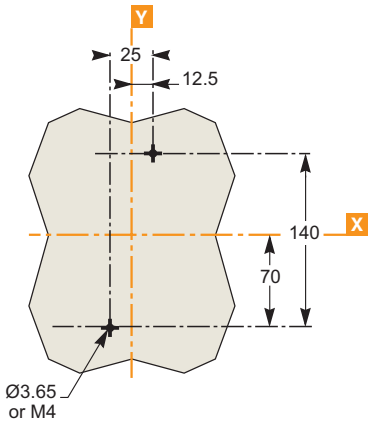

Dimensions - combination

DB127545

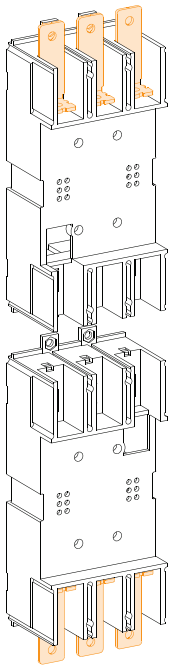

DB127546

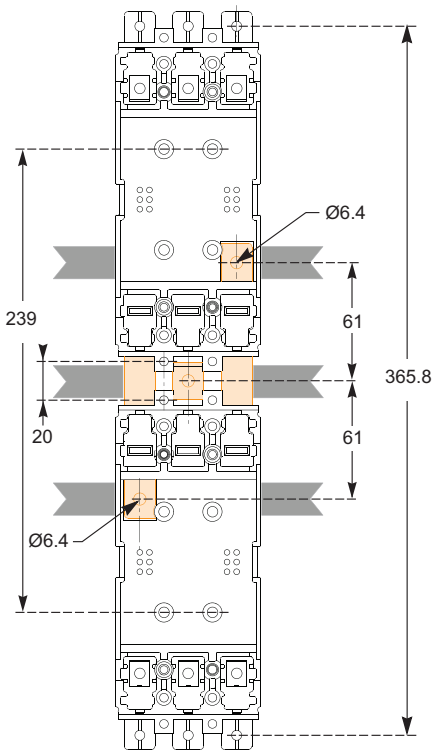

LVED212091EN.indb 5
16-4-13 下午4:12

Dimensions

EasyPact EZC 250
EZC 250/EZCV 250

Dimensions (EZC250)

2P, 3P

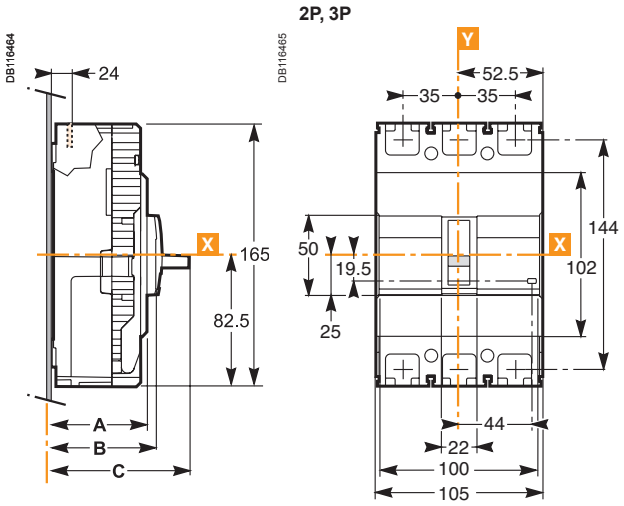

4P

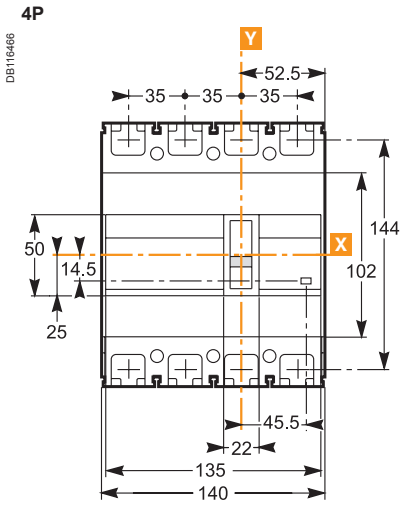

Dimensions (EZCV250)

3P

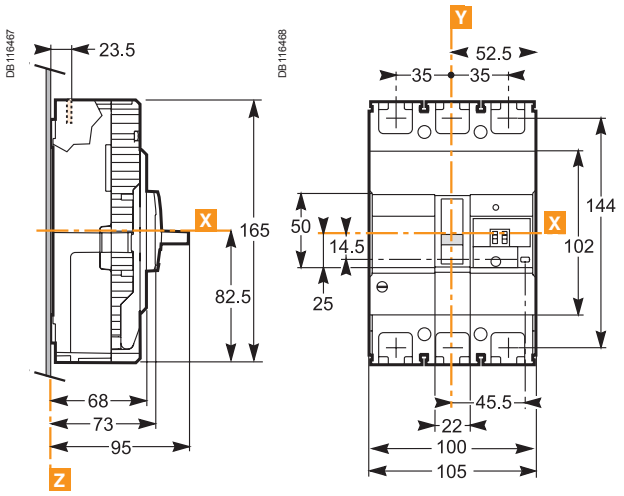

4P

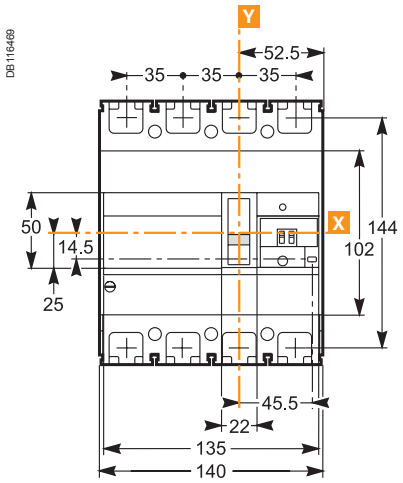

3P, 4P ELCB

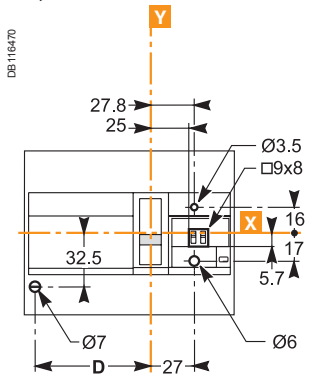

Mounting on plate

2P, 3P

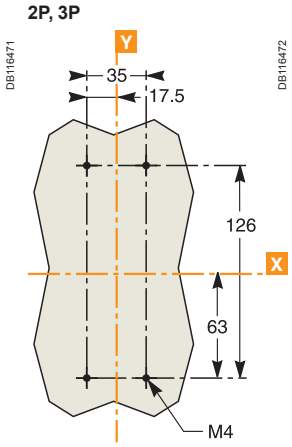

4P

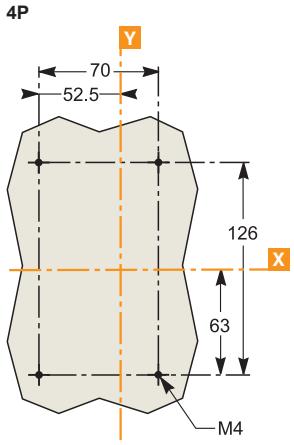

Schneider Electric

LVED212091EN.indb 6 16-4-13 下午4:12

Door cut-out (small)

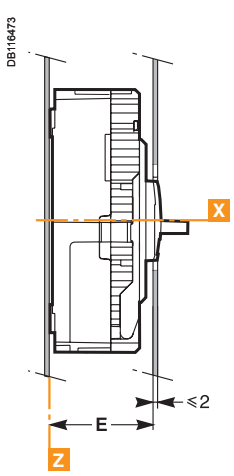

2P, 3P

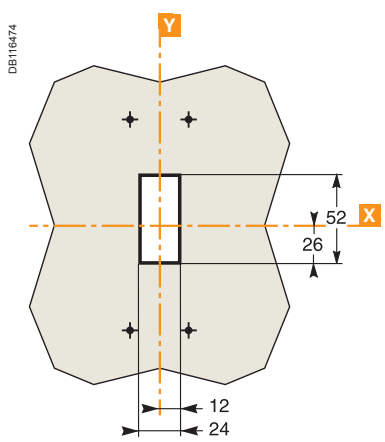

4P

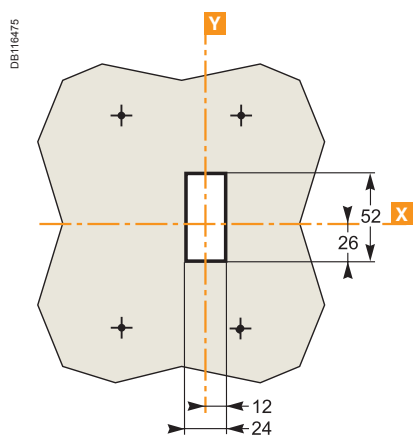

Door cut-out (large)

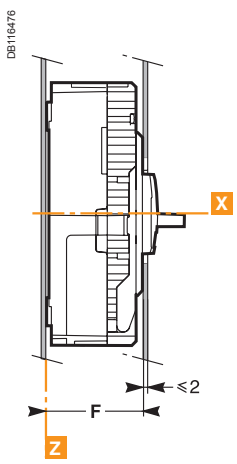

2P, 3P

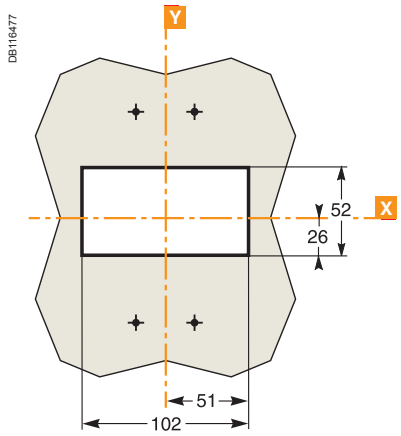

4P

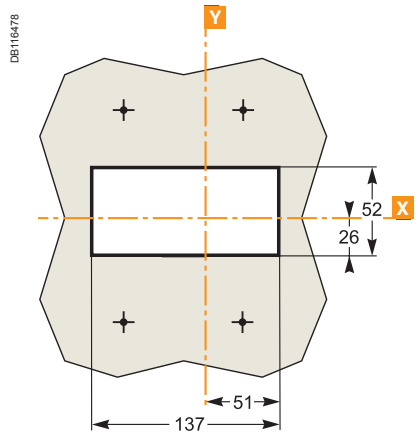

Dimensions (mm)

	A	B	C	D	E	F
EZC 2/3P	60	65	85.5	-	67	61
EZC 4P	68	73	95	-	75	69
EZCV 3P				45.5		
EZCV 4P				80.5		

LVED212091EN.indb 7 16-4-13 下午4:12

Dimensions

EasyPact EZC 250 A with plug-in

Dimensions

DB127550

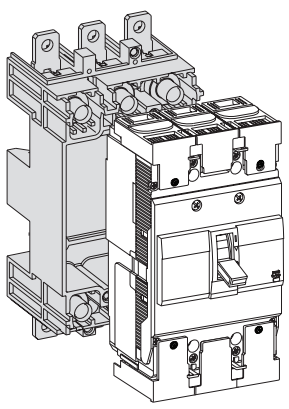

DB127586

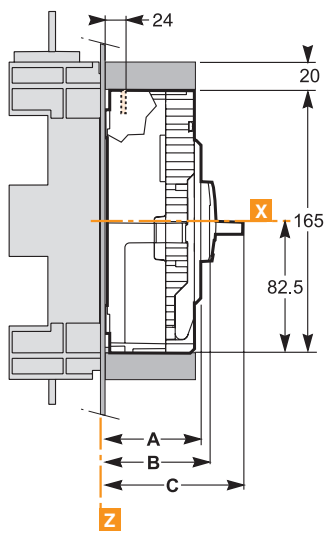

DB127587

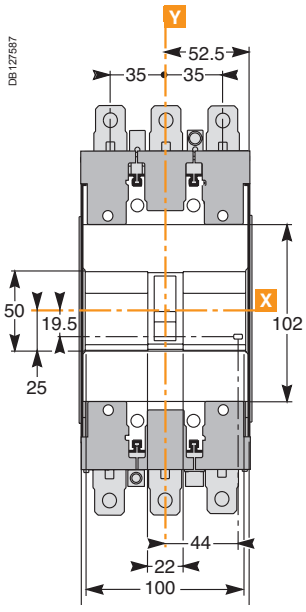

Mounting

Through front panel

DB127554

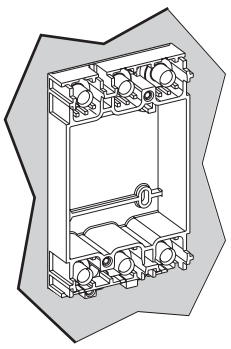

3P

DB127556

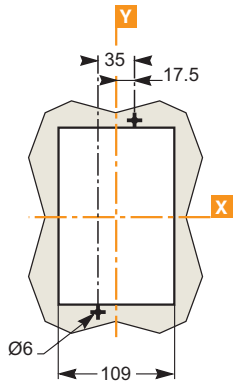

4P

DB127557

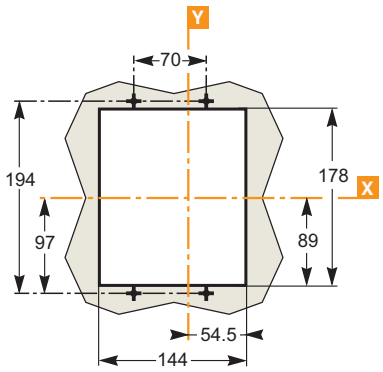

On rail

DB127555

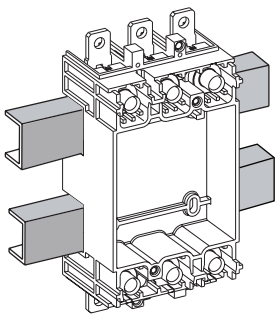

3P

DB127558

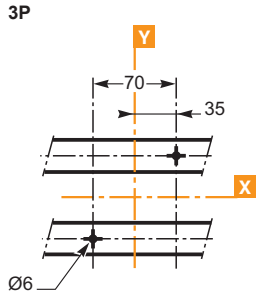

4P

DB127559

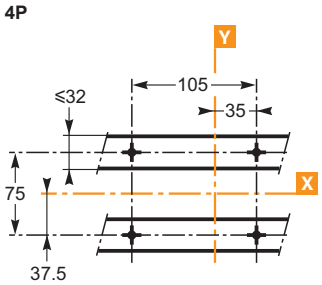

LVED212091EN.indb 8
16-4-13 下午4:12

On backplate

DB127560

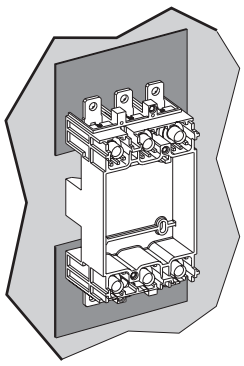

DB127581

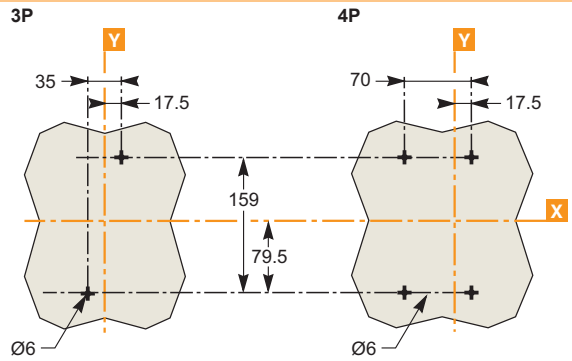

LVED212091EN.indb 9
16-4-13 下午4:12

Dimensions
EasyPact EZC 400/630

Dimensions

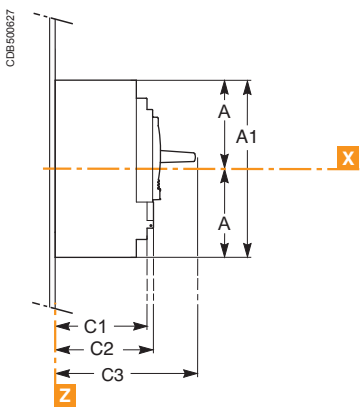

3P

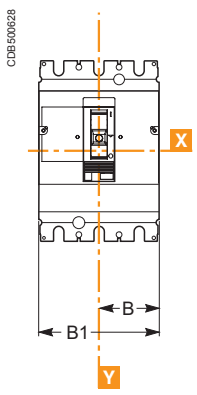

4P

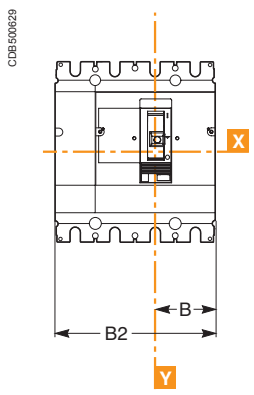

Mounting on plate

On backplate

3P

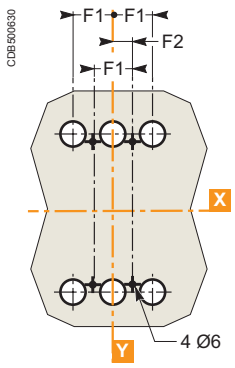

4P

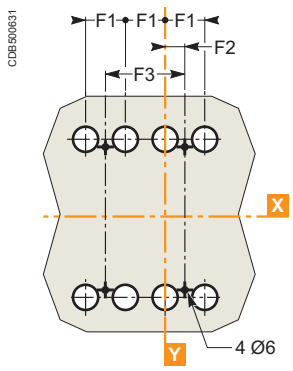

(1) The ØT holes are required for rear connection only.

A	A1	B	B1	B2	F1	F2	F3
127.5	255	70	140	185	45	22.5	90

LVED212091EN.indb 10
16-4-13 下午4:12

Bare sheet metal

For toggle

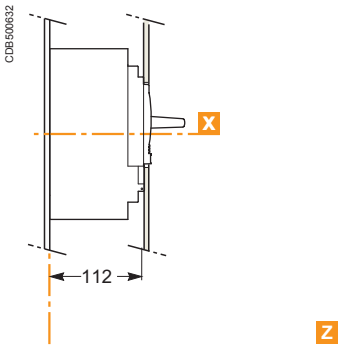

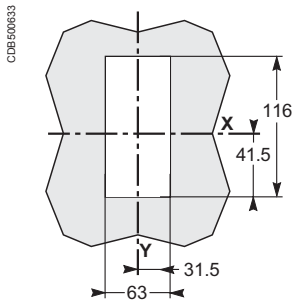

For toggle with access to trip unit

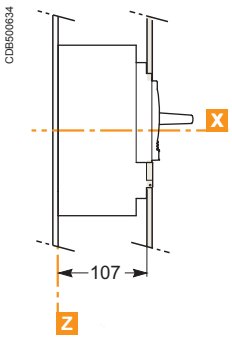

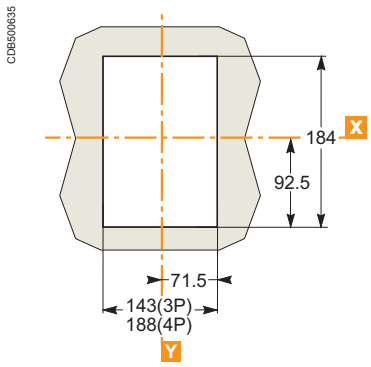

LVED212091EN.indb 11 16-4-13 下午4:12

Dimensions

EasyPact EZC 100 accessories

Terminal shields

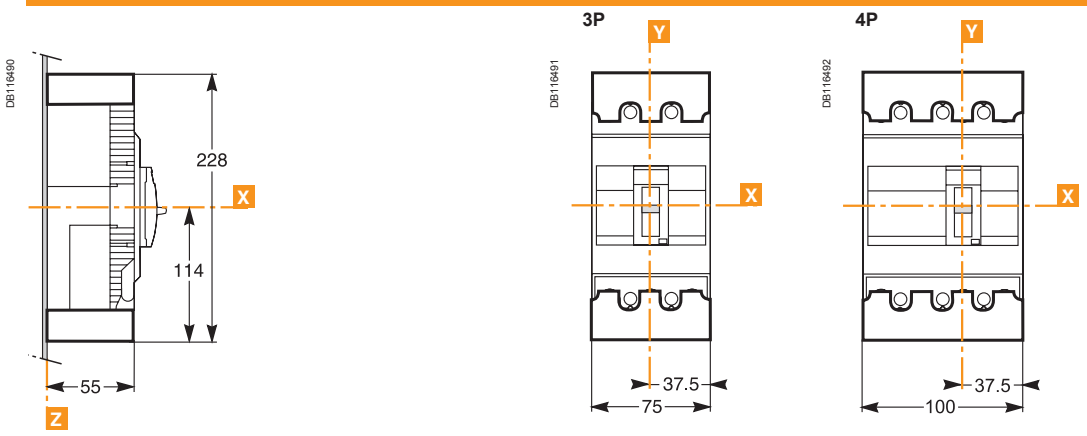

Phase barriers

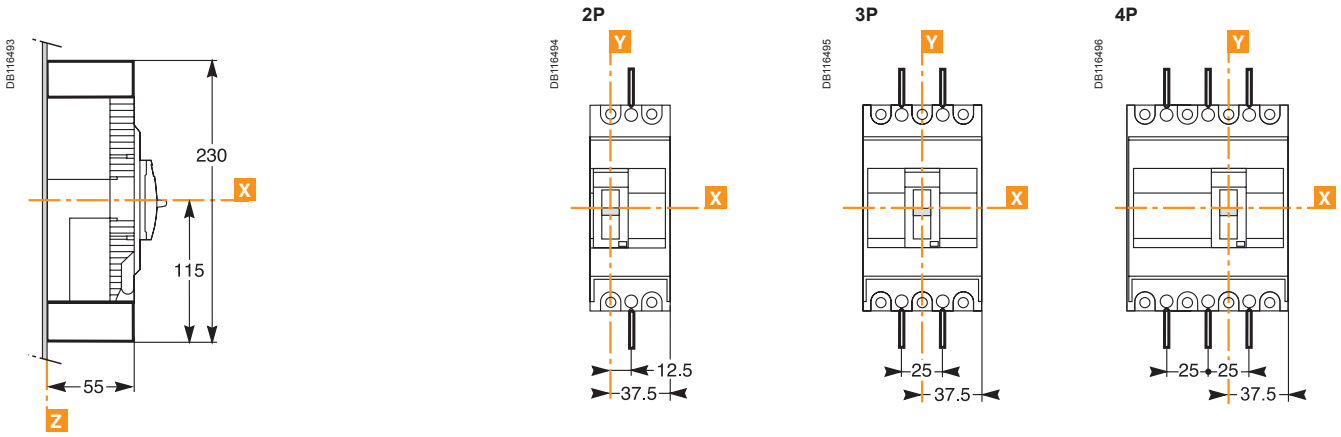

Direct rotary handle

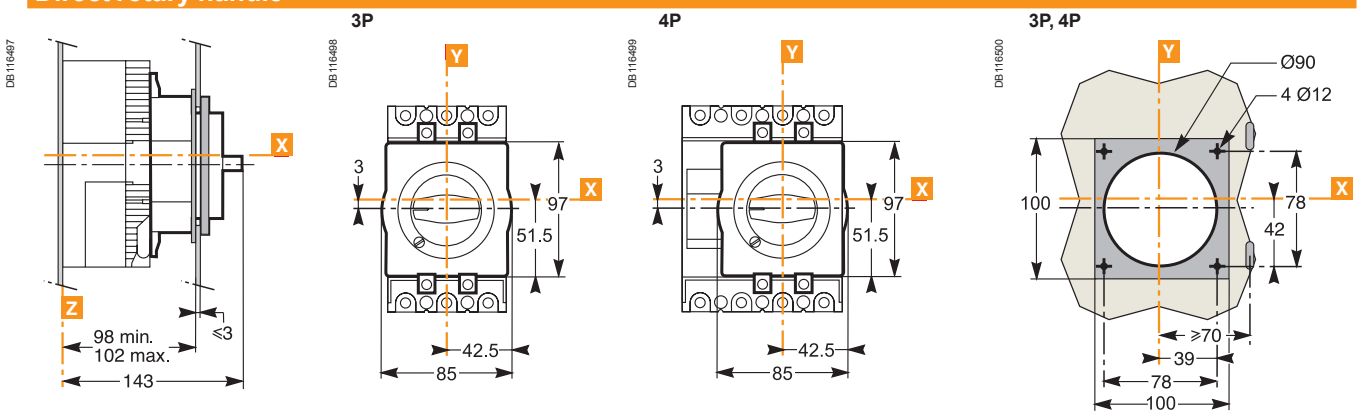

Extended rotary handle

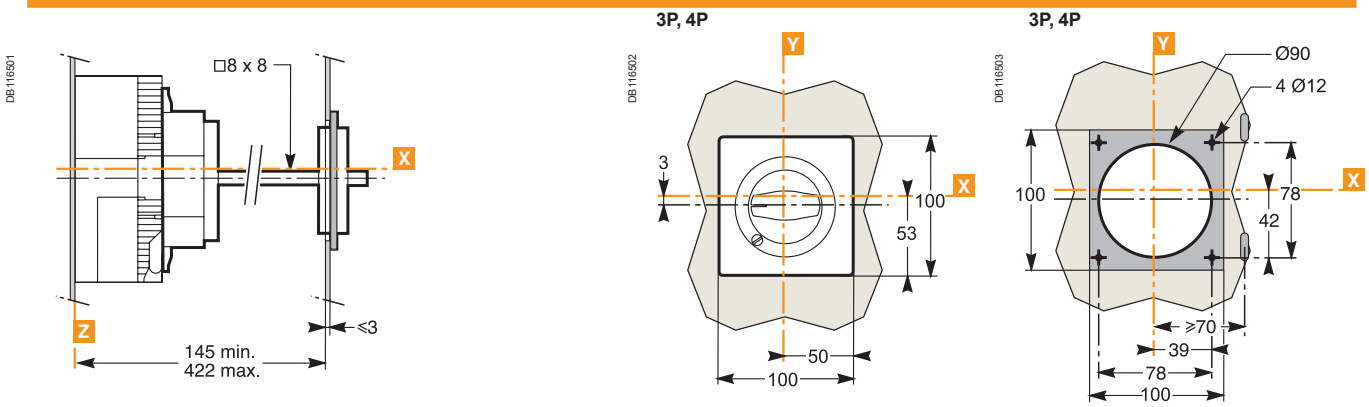

Schneider Electric

LVED212091EN.indb 12 16-4-13 下午4:12

Dimensions

EasyPact EZC 250 accessories

Terminal shields

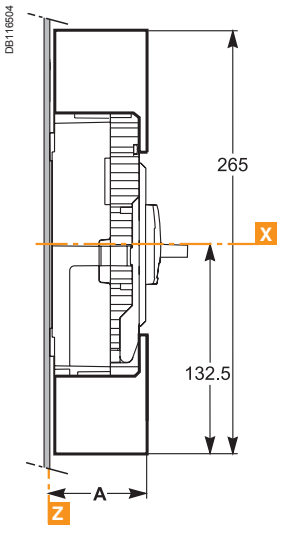

3P, 4P

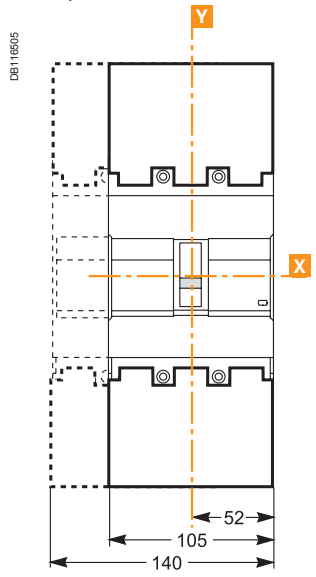

Phase barriers

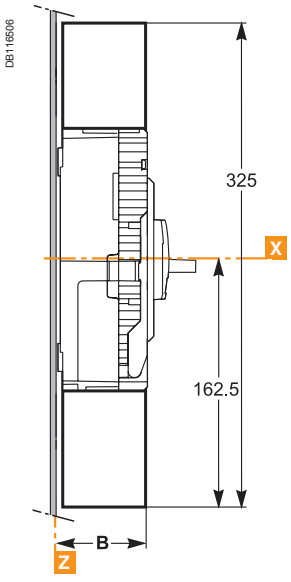

3P, 4P

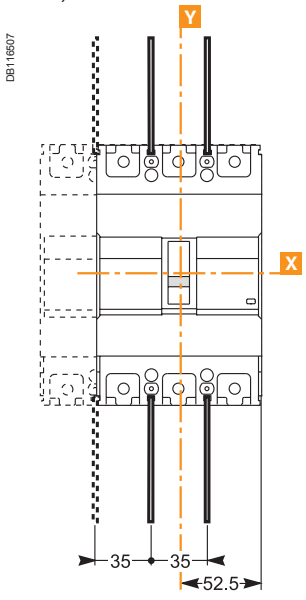

Direct rotary handle

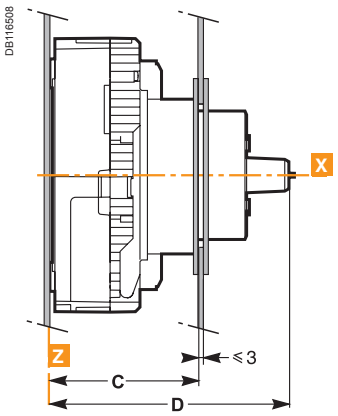

3P

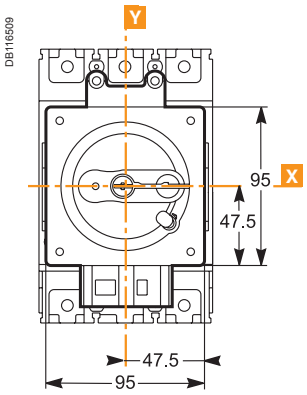

4P

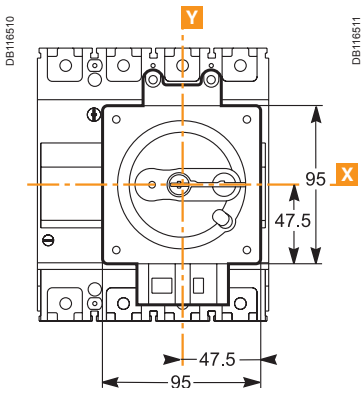

3P, 4P

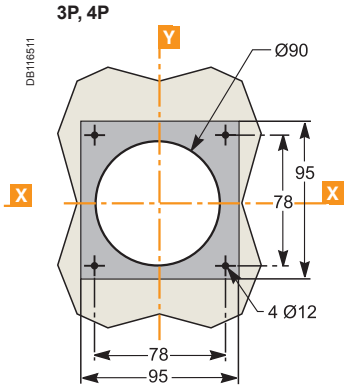

Extended rotary handle

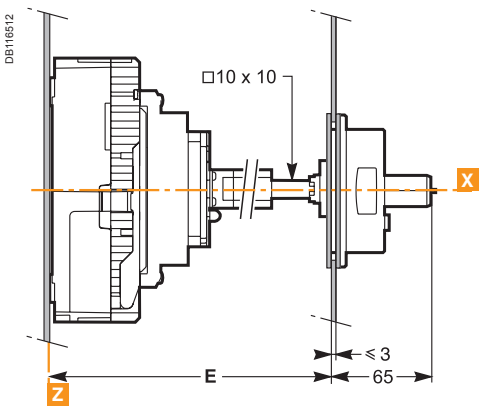

3P, 4P

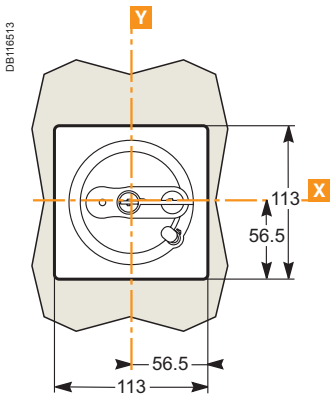

3P, 4P

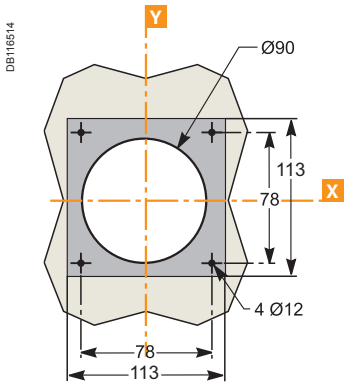

Dimensions (mm)

	A	B	C	D	E
EZC 2/3P	58.5	55	93 to 97	145	137 to 414
EZC 4P	66.5	63	101 to 105	153	145 to 422
EZCV 3P/4P					

Dimensions
EasyPact EZC 400/630 accessories

Terminal shields and Interphase barriers

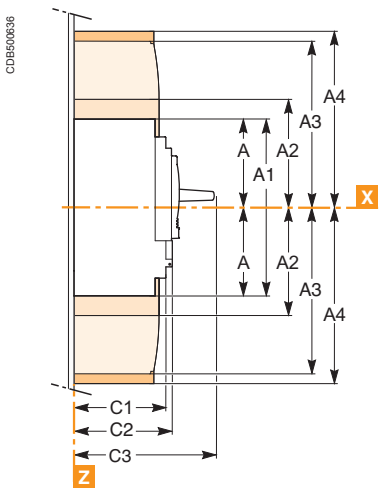

3P

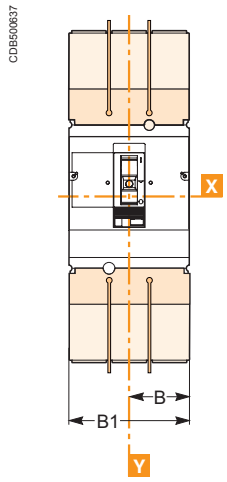

4P

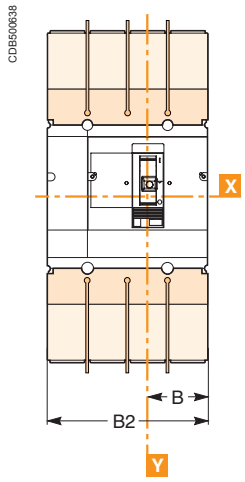

Interphase barriers.
Short terminal shields.

Long terminal shields also available for EZC400/630 spreaders with 52.5 mm pitch: B1 = 157.5 mm, B2 = 210 mm).

Direct rotary handle

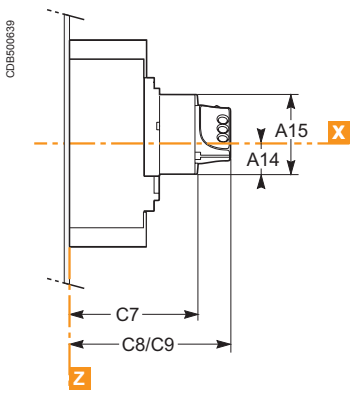

3P

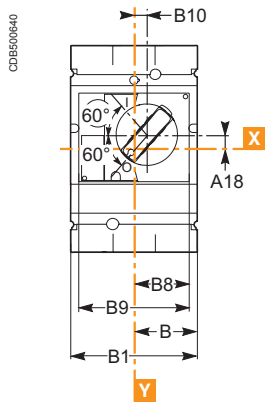

4P

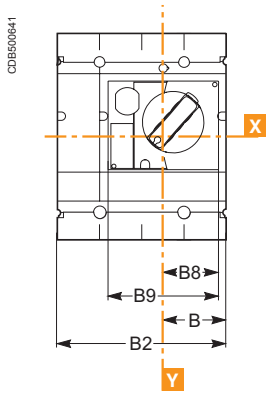

C8: without keylock
C9: with keylock

Extended rotary handle

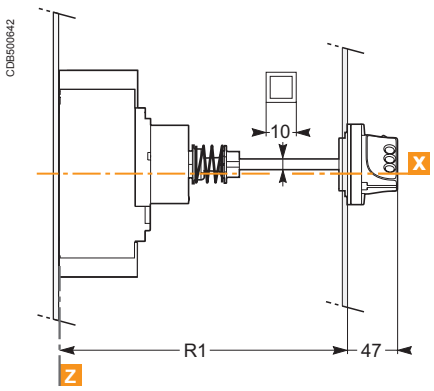

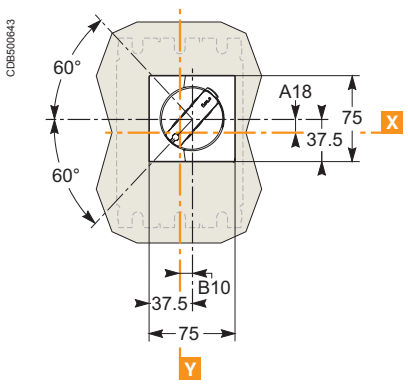

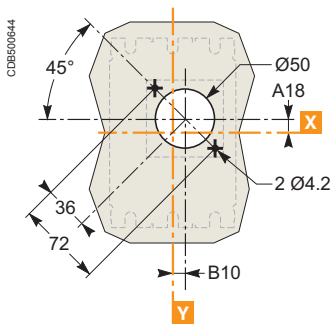

R1
min. 195
max. 600

A	A1	A2	A3	A4	B	B1	B2	C1	C2	C3	F1	F2	F3
127.5	255	142.5	200	237	70	140	185	95.5	110	168	45	22.5	90

A14	A15	A18	B8	B9	B10	C7	C8	C9	A18	B10
40	123	24.6	61.5	123	5	145	179	188	24.6	5

LVED212091EN.indb 14
16-4-13 下午4:12

Safety clearances and minimum distances

When installing a circuit breaker, minimum distances (safety clearances) must be maintained between the device and panels, bars and other protection devices installed nearby. These distances, which depend on the ultimate breaking capacity, are defined by tests carried out in accordance with standard IEC 60947-2.

If installation conformity is not checked by type tests, it is also necessary to:
- use insulated bars for circuit-breaker connections
- block off the busbars using insulating screens.

For EasyPact EZC breaker, terminal shields, inter-phase barriers or an insulation isolator are recommended and may be mandatory depending on the utilisation voltage and the type of installation.

Minimal distance between two adjacent circuit breakers

CPB500600

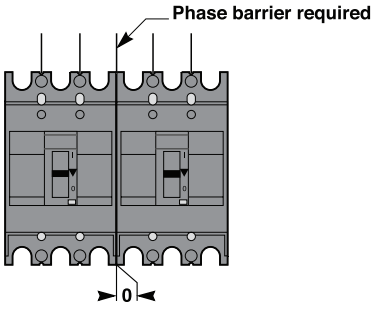

Minimal distance between the circuit breaker and top, bottom or side panels

CPB500601

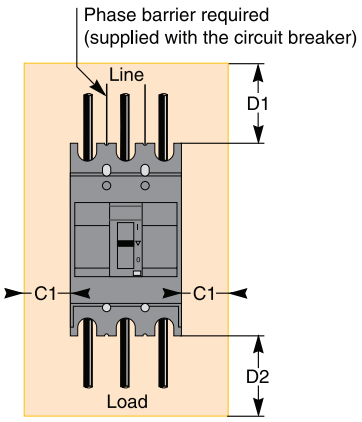

Minimal distance between the circuit breaker and front or rear panels

CPB500602

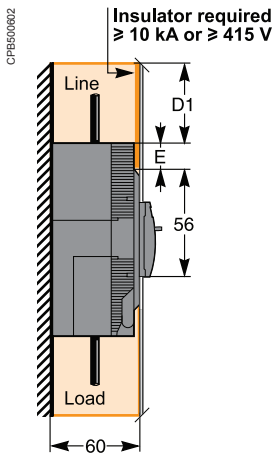

Dimensions (mm)	Bare or painted sheet metal:					
		insulated bars		bare busbar under voltage		
EasyPact EZC circuit breaker	**C1**	**D1**	**D2**	**D1**	**D2**	**E**
EZC100B/F/N	40	45	45	75	45	40
EZC100H	40	60	45	75	45	40
EZC250F/N-EZCV250N	50	60	45	140	45	42.5
EZC250H-EZCV250H	50	80	45	140	45	42.5
EZC400N	50	120	100	250	100	40
EZC400H	80	140	100	250	100	40
EZC630N	50	120	100	250	100	40
EZC630H	80	140	100	250	100	40

The mandatory distances when installing EasyPact EZC circuit breakers are calculated from the device case, not taking into account the terminal shields or the phase barriers.

LVED212091EN.indb 15 16-4-13 下午4:12

Safety clearances and minimum distances

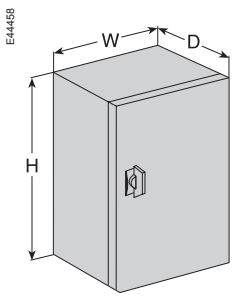

Installation in an enclosure.

Installation in an enclosure

EasyPact EZC circuit breakers can be installed in a metal enclosure together with other devices (contactors, motor-protection circuit breakers, LEDs, etc.).

Minimum enclosure dimensions (3P)

Circuit breakers	Height (mm)	Depth (mm) (1)	Width (mm)
EZC100B/F/N	200	90	155
EZC100H	215	90	155
EZC250F/N-EZCV250N	270	90	205
EZC250H-EZCV250H	290	90	205
EZC400N	480	160	240
EZC400H	500	160	300
EZC630N	480	160	240
EZC630H	500	160	300

(1) With front door.

LVED212091EN.indb 16 16-4-13 下午4:12

Temperature derating

Ambient temperature

EasyPact EZC devices are equipped with fixed thermal-magnetic trip units.

■ EasyPact EZC has been particularly designed to hold 100 % In at 50 °C without tripping in normal condition (except for earth-leakage circuit breakers).

■ EasyPact EZC circuit breakers may be used between -25 °C and +70 °C.

■ EasyPact EZC circuit breakers should be put into service under normal ambient operating temperature conditions. Exceptionally, the circuit breaker may be put into service when the ambient temperature is between -35 °C and -25 °C.

■ the permissible storage-temperature range for EasyPact EZC circuit breakers in the original packing is -35 °C to +85 °C.

To determine tripping times using time/current curves, use Ir values corresponding to the thermal setting on the device, corrected as indicated in the tables below.

Rated current (A)	25 °C	40 °C	45 °C	50 °C	55 °C	60 °C	65 °C	70 °C
EZC100								
15	17.0	15.7	15.3	15.0	14.7	14.6	14.2	13.8
16	18.1	16.7	16.3	16.0	15.7	15.6	15.1	14.7
20	21.8	20.4	20.2	20.0	19.7	19.2	18.9	18.5
25	26.9	25.7	25.3	25.0	24.7	24.5	24.3	24.0
30	34.5	31.4	30.7	30.0	29.4	29.1	28.5	28.0
32	36.8	33.5	32.7	32.0	31.4	31.0	30.4	29.9
40	42.8	40.9	40.4	40.0	39.5	38.0	37.6	37.1
45	48.8	46.9	45.9	45.0	44.4	43.3	42.6	41.9
50	54.2	52.1	51.0	50.0	49.3	48.1	47.3	46.6
60	64.4	61.8	60.9	60.0	59.0	57.5	56.6	55.7
63	67.6	64.9	63.9	63.0	62.0	60.4	59.4	58.5
75	78.6	76.8	75.9	75.0	73.5	70.4	69.8	69.1
80	84.4	82.2	81.1	80.0	78.6	77.3	76.7	76.1
100	109	103	101	100	99	94	94	93
EZC250								
63	77	69	66	63	60	56	53	49
80	93	86	83	80	77	74	71	68
100	115	106	103	100	96	93	89	85
125	148	135	130	125	120	114	109	103
150	174	160	155	150	145	139	134	128
160	186	171	166	160	154	148	142	136
175	207	188	182	175	168	161	153	145
200	236	215	208	200	192	184	175	166
225	268	244	235	225	215	205	194	182
250	297	270	260	250	239	228	215	203
EZCV250								
63	72	63	60	56	53	49	44	39
80	89	80	77	73	70	66	62	58
100	113	100	95	91	86	80	74	68
125	140	125	120	114	108	102	95	88
150	163	150	145	141	136	131	125	120
160	177	160	154	148	141	135	127	120
175	194	175	168	161	154	146	138	126
200	223	200	192	183	175	165	155	144
225	245	225	218	211	203	196	180	162
250	277	250	240	230	220	209	198	180
EZC400/630								
250	269	250	244	238	231	225	219	213
320	343	320	312	303.6	295	286	277	267.7
400	429	400	390	379.3	368.5	357.3	345.8	334
500	530	500	489.6	479	468	457	445.4	433.6
600	637	600	587	574	560.6	547	532.7	518

LVED212091EN.indb 17 16-4-13 下午4:12

Tripping curves

EasyPact EZC100 TM trip units

15-16 A

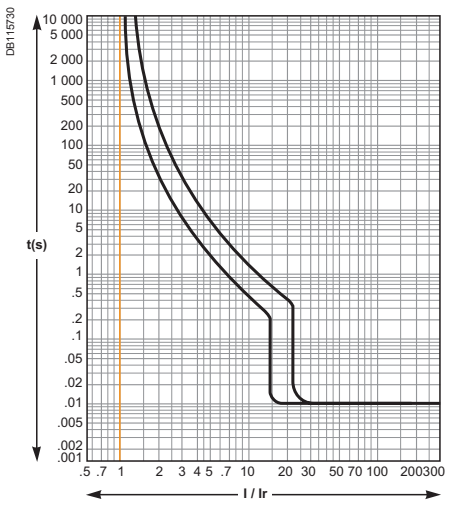

20 A

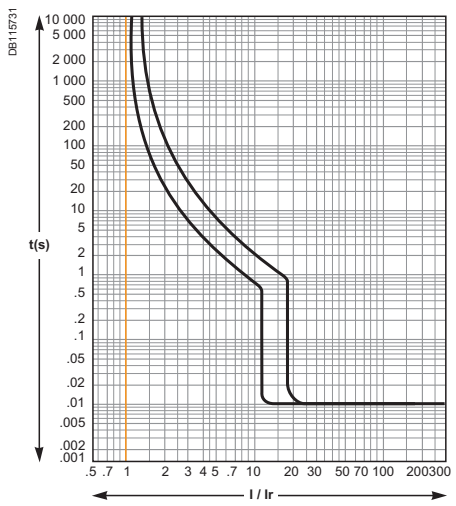

25 A

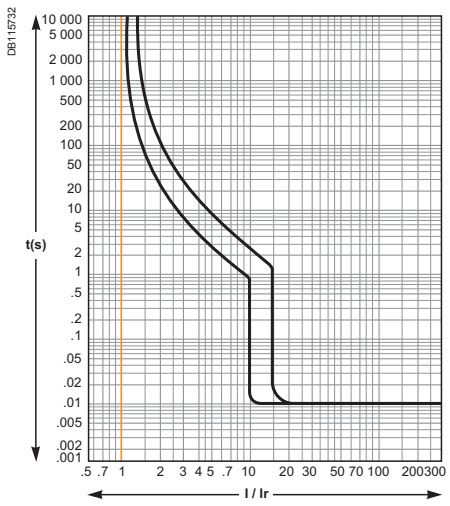

30-32 A

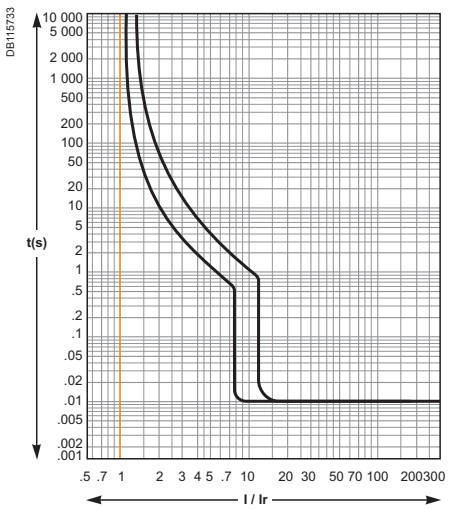

40 A

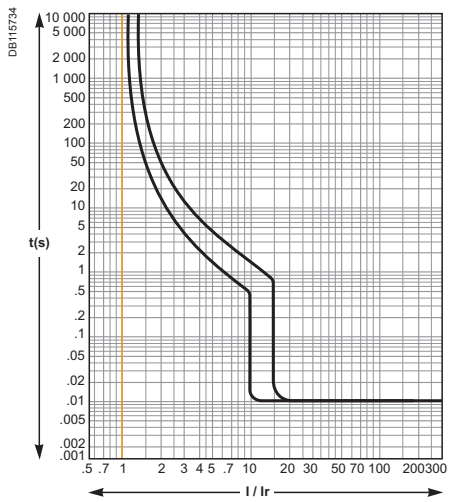

45-50 A

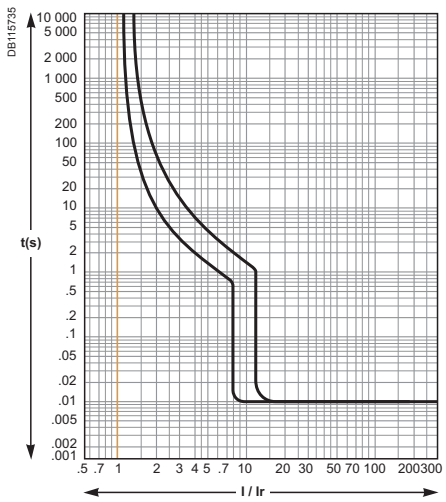

60-63 A

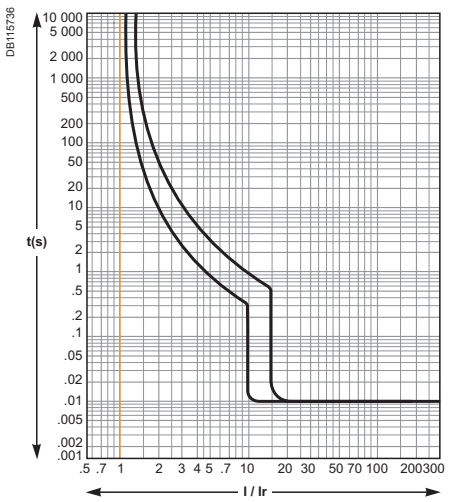

75 A

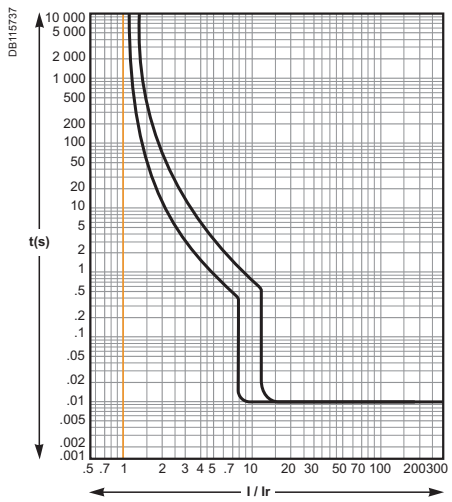

80 A

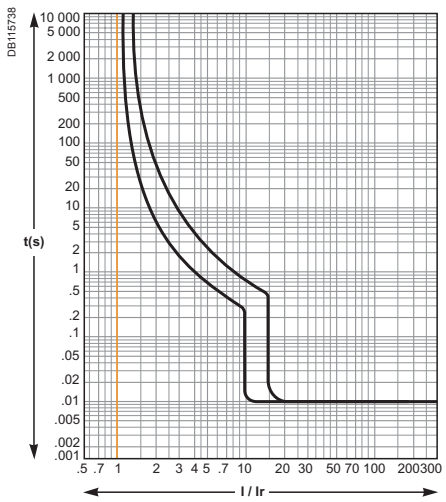

LVED212091EN.indb 18 16-4-13 下午4:12

EasyPact EZC100 TM trip units (cont.)

100 A

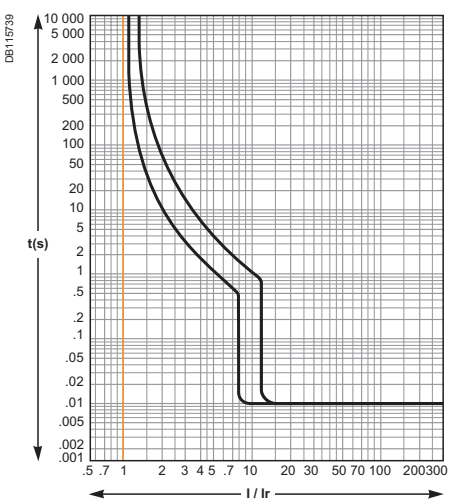

EasyPact EZC250 TM trip units

63-80-100-125 A

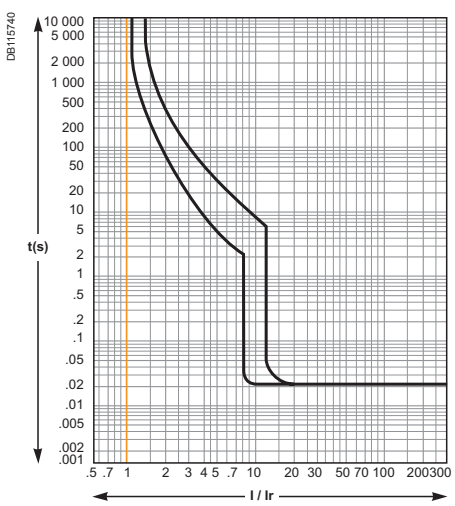

150-160-175-200 A

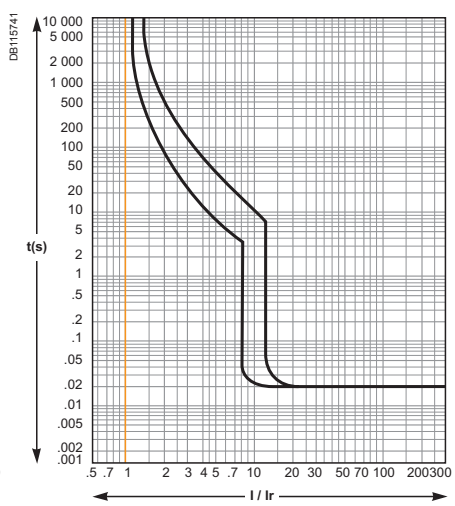

225-250 A

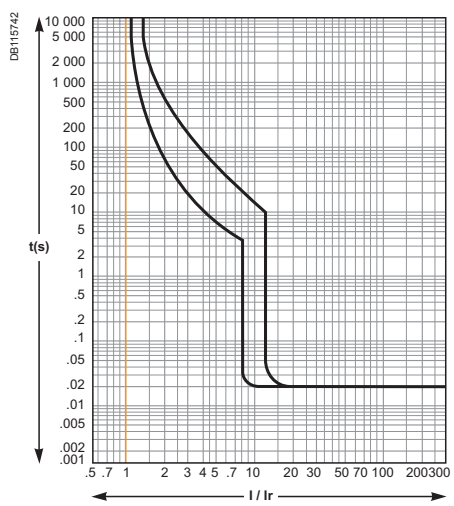

EasyPact EZC400 TM trip units

320-350-400 A

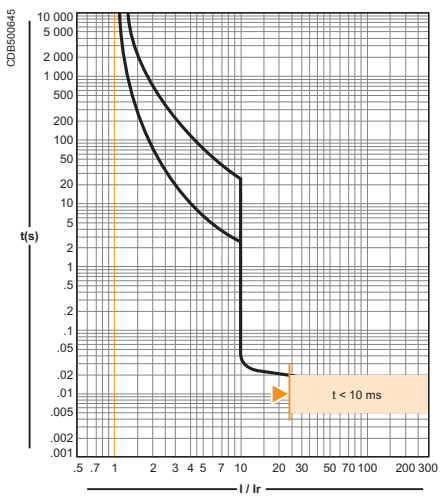

EasyPact EZC630 TM trip units

TM500D

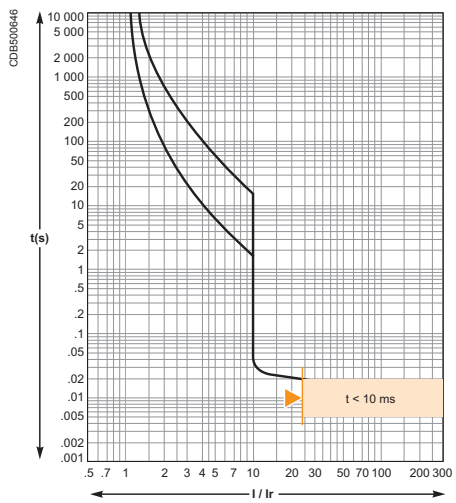

TM600D

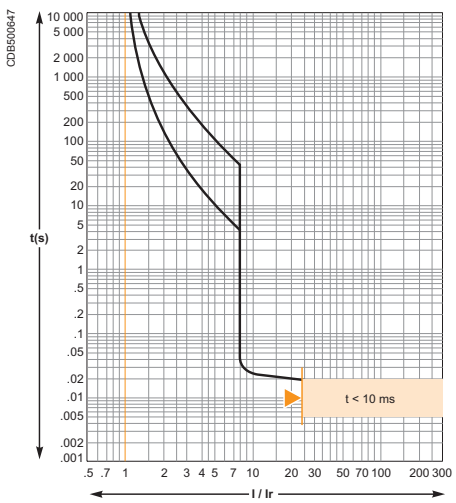

Reflex tripping.

LVED212091EN.indb 19
16-4-13 下午4:12

Current-limiting curves

The limiting capacity of a circuit breaker is its aptitude to limit short-circuit currents.

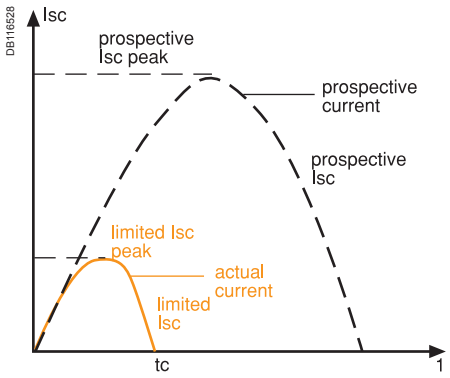

The exceptional limiting capacity of the EasyPact EZC range greatly reduces the forces created by fault currents in devices.
The result is a major increase in breaking performance.

The Ics value, defined by IEC standard 60947-2, is guaranteed by tests comprising the following operations:
- ■ break three times consecutively a fault current equal from 25% to 100% of Icu
- ■ check that the device continues to function normally:
- □ it conducts the rated current without abnormal temperature rises
- □ protection functions perform within the limits specified by the standard
- □ suitability for isolation is not impaired.

Longer service life of electrical installations

Current-limiting circuit breakers greatly reduce the negative effects of short-circuits on installations.
Thermal effects
Less temperature rise in conductors, therefore longer service life for cables.
Mechanical effects
Reduced electrodynamic forces, therefore less risk of electrical contacts or busbars being deformed or broken.
Electromagnetic effects
Less disturbances for measuring devices located near electrical circuits.

Economy by means of cascading

Cascading is a technique directly derived from current limiting. Circuit breakers with breaking capacities less than the prospective short-circuit current may be installed downstream of a limiting circuit breaker. The breaking capacity is reinforced by the limiting capacity of the upstream device.
It follows that substantial savings can be made on downstream equipment and enclosures.

Current-limiting curves

The current-limiting capacity of a circuit breaker is expressed by two curves which are a function of the prospective short-circuit current (the current which would flow if no protection devices were installed):
- ■ the actual peak current (limited current),
- ■ thermal stress (A^2s), i.e. the energy dissipated by the short-circuit in a conductor with a resistance of 1 Ω.

Current limiting curves 380/415 V AC

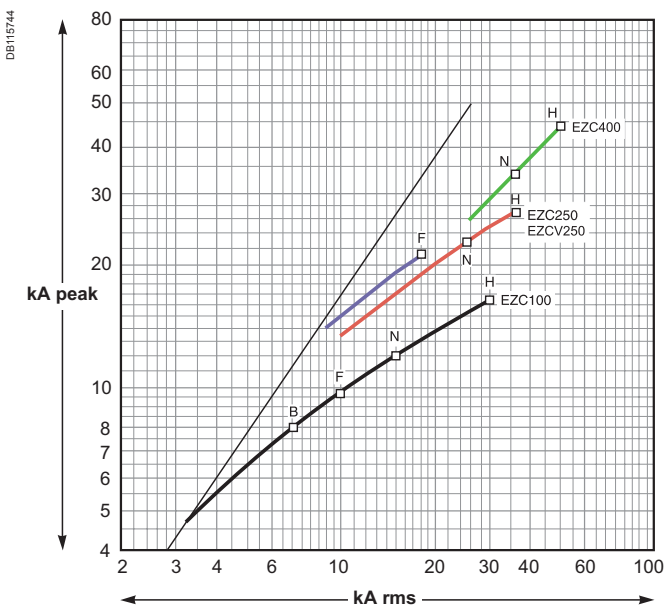

Thermal-stress curves 380/415 V AC

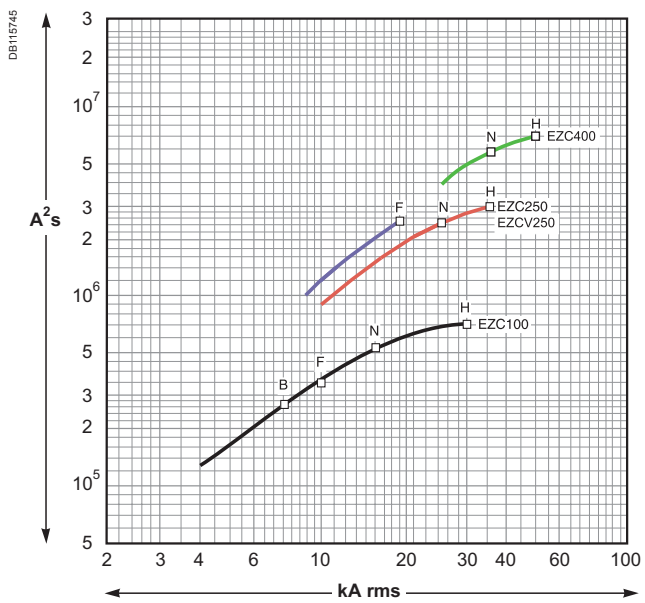

Schneider Electric
LVED212091EN.indb 20
16-4-13 下午4:13

Cascading

What is cascading?

Cascading is the use of the current limiting capacity of circuit breakers at a given point to permit installation of lower-rated and therefore lower-cost circuit breakers downstream.
The upstream compact circuit breakers acts as a barrier against short-circuit currents. In this way, downstream circuit breakers with lower breaking capacities than the prospective short-circuit (at their point of installation) operate under their normal breaking conditions.
Since the current is limited throughout the circuit controlled by the limiting circuit breaker, cascading applies to all switchgear downstream. It is not restricted to two consecutive devices.

General use of cascading

With cascading, the devices can be installed in different switchboards. Thus, in general, cascading refers to any combination of circuit breakers where a circuit breaker with a breaking capacity less than the prospective Isc at its point of installation can be used. Of course, the breaking capacity of the upstream circuit breaker must be greater than or equal to the prospective short-circuit current at its point of installation.
The combination of two circuit breakers in cascading configuration is covered by the IEC 60947-2.

Coordination between circuit breakers

The use of a protective device possessing a breaking capacity less than the prospective short-circuit current at its installation point is permitted as long as another device is installed upstream with at least the necessary breaking capacity.
In this case, the characteristics of the two devices must be coordinated in such a way that the energy let through by the upstream device is not more than that which can be withstood by the downstream device and the cables protected by these devices without damage.
Cascading can only be checked by laboratory tests and the possible combinations can be specified only by the circuit breaker manufacturer.

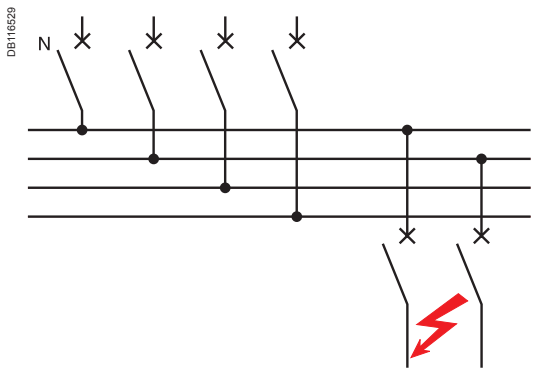

220/240 V network downstream from a 380/415 V network

For 1P + N or 2P circuit breakers connected between the phase and neutral on a 380/415 V network, with a TT or TNS neutral system, consult the 220/240 V cascading table to determine cascading possibilities between upstream and downstream circuit breakers.

Economy by means of cascading

Thanks to cascading, circuit breakers with breaking capacities less than the prospective short-circuit current may be installed downstream from a current limiting circuit breaker.
It follows that substantial savings can be made on downstream switchgear and enclosures.

Cascading tables

Schneider Electric cascading tables are:
■ drawn up on the basis of calculations (comparison between the energy limited by the upstream device and the maximum permissible thermal stress for the downstream device)
■ verified experimentally in accordance with IEC standard 60947-2.
For distribution systems with 220/240 V, 380/415 V and 440 V between phases, the tables of the following pages indicate cascading possibilities between upstream Compact/EasyPact EZC and downstream Multi 9 and EasyPact EZC circuit breakers.

LVED212091EN.indb 21 16-4-13 下午4:13

Cascading tables

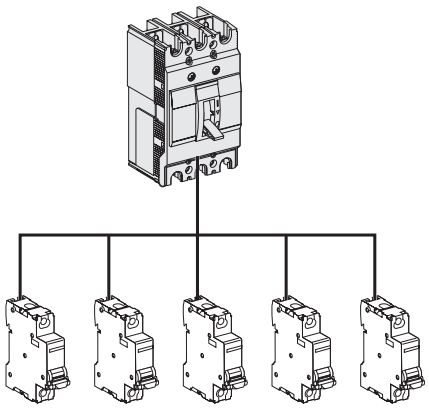

Network 220/240 V

Upstream		EZC100F	EZC100N	EZC100H
Breaking capacity kArms		25	25	100
Downstream		Enhanced breaking capacity		
iC60a	10	25	25	50
iC60N	20	25	25	65
iC60H	30	-	-	65

Upstream		EZC250F	EZC250N EZCV250N	EZC250H EZCV250H	NSX250H
Breaking capacity kA rms		25	50	85	100
Downstream		Enhanced breaking capacity			
EZC100B	10	-	-	15	20
EZC100F	25	-	30	30	50
EZC100N	25	-	30	36	50
EZC100H	100	-	-	-	-

Upstream		EZC400N	EZC400H	NB400 NB630	NSX400N NSX630N	NSX400H NSX630H
Breaking capacity kA rms		40	70	85	85	100
Downstream		Enhanced breaking capacity				
EZC100B	10	20	20	20	20	20
EZC100F	25	40	40	50	50	50
EZC100N	25	40	40	50	50	50
EZC100H	100	-	-	-	-	-
EZC250F	25	40	40	50	50	50
EZC/EZCV250N	50	-	70	85	85	85
EZC/EZCV250H	85	-	100	-	-	100

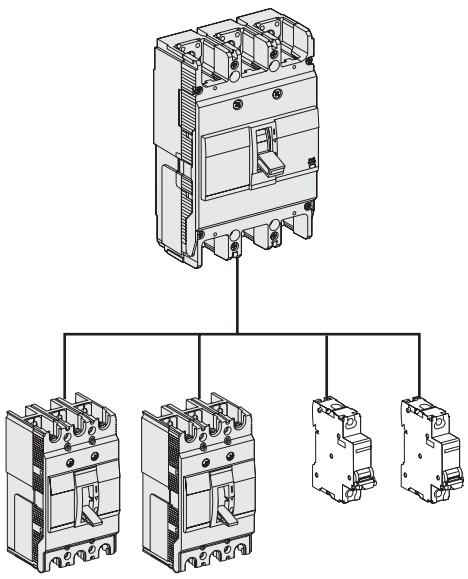

Network 380/415 V

Upstream		EZC100F	EZC100N	EZC100H
Breaking capacity kA rms		10	15	30
Downstream		Enhanced breaking capacity		
iC60a	6	10	15	15
iC60N	10	-	15	15
iC60H	15	-	-	15

Upstream		EZC250F	EZC250N EZCV250N	EZC250H EZCV250H	NSX250H
Breaking capacity kA rms		18	25	36	70
Downstream		Enhanced breaking capacity			
EZC100B	7.5	-	-	-	15
EZC100F	10	-	15	15	30
EZC100N	15	-	20	25	50
EZC100H	30	-	-	36	70

Upstream		EZC400N	EZC400H	NB400 NB630	NSX400N NSX630N	NSX400H NSX630H
Breaking capacity kA rms		36	50	30	50	70
Downstream		Enhanced breaking capacity				
EZC100B	7.5	-	-	-	-	-
EZC100F	10	-	-	-	-	-
EZC100N	15	20	20	20	20	30
EZC100H	30	36	36	-	45	50
EZC250F	18	20	20	20	20	20
EZC/EZCV250N	25	36	36	30	36	40
EZC/EZCV250H	36	-	-	-	45	50

LVED212091EN.indb 22 16-4-13 下午4:13

Network 440 V

Upstream		EZC250F	EZC250N EZCV250N	EZC250H EZCV250H
Breaking capacity kA rms		**15**	**20**	**25**
Downstream		**Enhanced breaking capacity**		
EZC100B	5	-	-	-
EZC100F	7.5	-	-	-
EZC100N	10	-	15	15
EZC100H	20	-	-	-

Upstream		EZC400N	EZC400H	NB400 NB630	NSX400N NSX630N	NSX400H NSX630H
Breaking capacity kA rms		**36**	**50**	**30**	**42**	**65**
Downstream		**Enhanced breaking capacity**				
EZC100B	5	-	-	-	-	-
EZC100F	7.5	-	-	-	-	-
EZC100N	10	15	15	15	15	25
EZC100H	25	-	30	30	30	30
EZC250F	15	20	20	-	-	-
EZC/EZCV250N	20	-	25	25	25	30
EZC/EZCV250H	25	-	30	30	30	30

LVED212091EN.indb 23 16-4-13 下午4:13

Motor protection

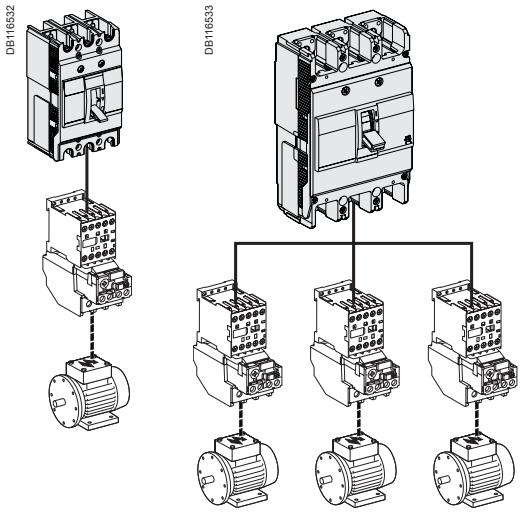

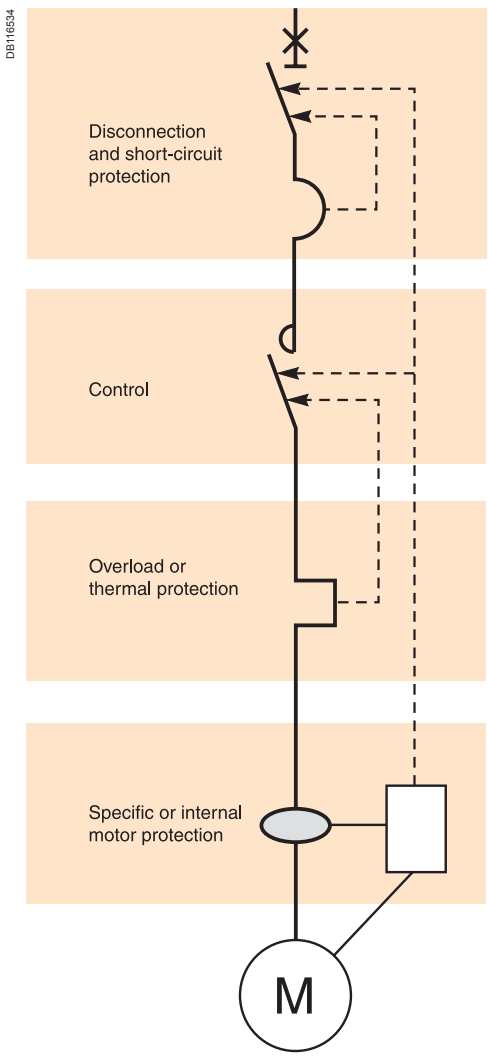

A circuit supplying a motor may include one, two, three or four switchgear or controlgear devices fulfilling one or more functions.

When a number of devices are used, they must be coordinated to ensure optimum operation of the motor.
Protection of a motor circuit involves a number of parameters that depend on:
- the application (type of machine driven, operating safety, starting frequency, etc.)
- the level of service continuity imposed by the load or the application
- the applicable standards to ensure protection of life and property.

The necessary electrical functions are of very different natures:
- short circuit protection
- overload protection dedicated for motor
- control (generally with high endurance levels)
- isolation.

Protection functions

Disconnection functions:
Isolate a motor circuit prior to maintenance operations.

Short-circuit protection:
Protect the starter and the cables against major overcurrents (> 10 In).
This type of protection is provided by a circuit breaker.

Control:
Start and stop the motor and, if applicable:
- gradual acceleration
- speed control.

Overload protection:
Protect the starter and the cables against minor overcurrents (< 10 In).
Thermal relays provide protection against this type of fault. They may be:
- integrated in the short-circuit protective device
- separate.

Additional specific protection:
- limitative fault protection (while the motor is running)
- preventive fault protection (monitoring of motor insulation with motor off).

Overloads (I < 10 In)
An overload may be caused by:
- an electrical problem, for instance on the mains (loss of a phase, voltage outside tolerances, etc.)
- a mechanical problem, for instance excessive torque due to abnormally high demands by the process or motor damage (bearing vibrations, etc.).

A further consequence of these two origins is excessively long starting.

Impedance short-circuit (10 < I < 50 In)
Deterioration of motor-winding insulation is the primary cause.

Short-circuit (I > 50 In)
This type of fault is relatively rare. A possible cause may be a connection error during maintenance.

Protection against insulation faults
This type of protection may be provided by:
- a residual current device (RCD)
- an insulation monitoring device (IMD).

LVED212091EN.indb 24 16-4-13 下午4:13

Motors P (kW)	220/230 V I (A)	240 V I (A)	Circuit breakers Type	Rating In (A)	380/400 V I (A)	415 V I (A)	Circuit breakers Type	Rating In (A)	440 V I (A)	Circuit breakers Type	Rating In (A)
0.37	2	1.8	EZC100	20	1.2	1.1	EZC100	20	1	EZC100	20
0.55	2.8	2.6		20	1.6	1.5		20	1.4		20
0.75	3.5	3.2		20	2	1.8		20	1.7		20
1.1	5	4.5		20	2.8	2.6		20	2.4		20
1.5	6.5	6		20	3.7	3.4		20	3.1		20
2.2	9	8		20	5.3	4.8		20	4.5		20
3	12	11		20	7	6.5		20	5.8		20
4	15	14		20	9	8.2		20	8		20
5.5	21	19		40	12	11		20	10.5		20
7.5	28	25		60	16	14		20	13.7		20
10	36	33		60	21	19		40	19		40
11	39	36		80	23	21		40	20		40
15	52	48		80	30	28		60	26.5		60
18.5	63	59		80	37	34		60	33		60
22	75	70	EZC250	125	43	40		80	39		60
30	100	95		160	59	55	EZC250	125	52		80
37	125	115		250	72	66		150	63	EZC250	125
45	150	140		250	85	80		160	76		150

LVED212091EN.indb 25 16-4-13 下午4:13

Capacitor protection

EZC100.

EZC250.

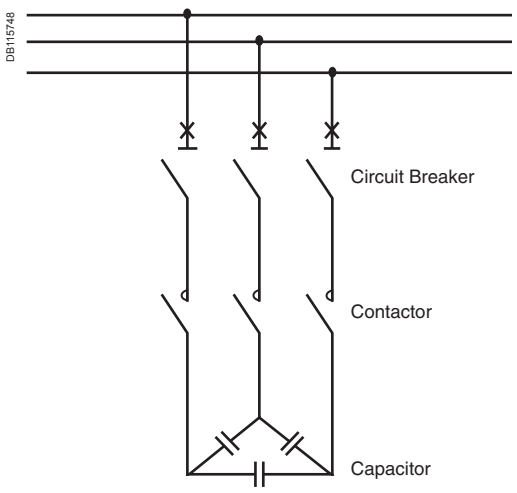

EasyPact EZC circuit breaker is suitable for capacitor protection following the rules below:

■ **Inc = Nominal current of the capacitor**

$$Inc = \frac{Qc}{U\sqrt{3}}$$

Inc = Nominal Current Capacitor (A)
Qc = Reactive power (kVAR)
U = Nominal Voltage (V)

■ **Inb = Nominal current of the circuit breaker (EZC)**
□ Inb = 1.36 x Inc for standard equipment
□ Inb = 1.5 x Inc for overrated type equipment
□ Inb = 1.12 x Inc for detuned type equipment: 2.7 tuning
□ Inb = 1.19 x Inc for detuned type equipment: 3.8 tuning
□ Inb = 1.31 x Inc for detuned type equipment: 4.3 tuning
□ the short-circuit (magnetic) protection-setting thresholds must enable passage of the energising transients: 10 x Inc for standard, overrated and detuned type equipment.

■ **Icu = Ultimate breaking capacity of the circuit breaker (EZC)**
Icu short-circuit level is given by the installation.

Example:

Table at 400 V AC - 3 phases 50 Hz for standard equipment.

Reactive power (kVAR)	Inc (A)	Inb (A)	Breaking capacity to Circuit Breaker 15 kA	30 kA
7.5	11	15	**EZC100N3015**	**EZC100H3015**
10	14	20	**EZC100N3020**	**EZC100H3020**
15	22	30	**EZC100N3030**	**EZC100H3030**
20	29	40	**EZC100N3040**	**EZC100H3040**
30	43	60	**EZC100N3060**	**EZC100H3060**
40	58	80	**EZC100N3080**	**EZC100H3080**
50	72	100	**EZC100N3100**	**EZC100H3100**
60	87	118	**EZC250F3125**	**EZC250H3125**
75	108	147	**EZC250F3150**	**EZC250H3150**
100	144	196	**EZC250F3200**	**EZC250H3200**

LVED212091EN.indb 26 16-4-13 下午4:13

Catalogue numbers

Presentation *II*
Functions and characteristics *A-1*
Busbars *B-1*
Installation guide *C-1*

EZC100N/H 1P/2P
Circuit breaker D-2

EZC100B/F/N/H 3P
Circuit breaker D-3

EZC100N/H 4P
Circuit breaker D-4

EZC100N/H/B/F
Accessories D-5

EZC250F/N/H 2P/3P
Circuit breaker D-7

EZC250N/H 4P
Circuit breaker D-8

EZCV250N/H 3P/4P
Earth-leakage circuit breaker D-9

EZC250F/N/H, EZCV250N/H
Accessories D-10

EZC400N/H 3P/4P
Circuit breaker D-12

EZC630N/H 3P/4P
Circuit breaker D-13

EZC400/630N/H
Accessories D-14

EasyPact EZC Busbar
Type-tested solution IEC 60439 D-17

LVED212091EN.indb 1 16-4-13 下午4:13

EZC100N/H 1P/2P
Circuit breaker

EasyPact EZC100N 1P 18 kA 220/240 V

With thermal magnetic trip unit

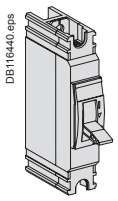

Rating	**1P** 1t
15 A	**EZC100N1015**
16 A	**EZC100N1016**
20 A	**EZC100N1020**
25 A	**EZC100N1025**
30 A	**EZC100N1030**
32 A	**EZC100N1032**
40 A	**EZC100N1040**
45 A	**EZC100N1045**
50 A	**EZC100N1050**
60 A	**EZC100N1060**
63 A	**EZC100N1063**
75 A	**EZC100N1075**
80 A	**EZC100N1080**
100 A	**EZC100N1100**

EasyPact EZC100H 1P 25 kA - 2P 50 kA 220/240 V

With thermal magnetic trip unit

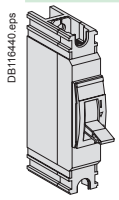

1P

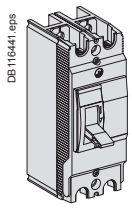

2P

Rating	**1P** 1t	**2P** 2t
15 A	**EZC100H1015**	**EZC100H2015**
16 A	**EZC100H1016**	**EZC100H2016**
20 A	**EZC100H1020**	**EZC100H2020**
25 A	**EZC100H1025**	**EZC100H2025**
30 A	**EZC100H1030**	**EZC100H2030**
32 A	**EZC100H1032**	**EZC100H2032**
40 A	**EZC100H1040**	**EZC100H2040**
45 A	**EZC100H1045**	**EZC100H2045**
50 A	**EZC100H1050**	**EZC100H2050**
60 A	**EZC100H1060**	**EZC100H2060**
63 A	**EZC100H1063**	**EZC100H2063**
75 A	**EZC100H1075**	**EZC100H2075**
80 A	**EZC100H1080**	**EZC100H2080**
100 A	**EZC100H1100**	**EZC100H2100**

LVED212091EN.indb 2 16-4-13 下午4:13

EZC100B/F/N/H 3P
Circuit breaker

EasyPact EZC100B 3P 7.5 kA 400/415 V

With thermal magnetic trip unit

DB116442.eps

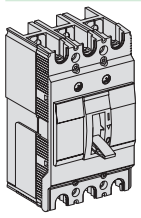

Rating	**3P** 3t
15 A	**EZC100B3015**
16 A	**EZC100B3016**
20 A	**EZC100B3020**
25 A	**EZC100B3025**
30 A	**EZC100B3030**
32 A	**EZC100B3032**
40 A	**EZC100B3040**
45 A	**EZC100B3045**
50 A	**EZC100B3050**
60 A	**EZC100B3060**

EasyPact EZC100F 3P 10 kA 400/415 V

With thermal magnetic trip unit

DB116442.eps

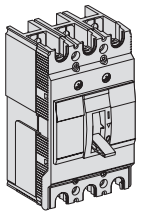

Rating	**3P** 3t
15 A	**EZC100F3015**
16 A	**EZC100F3016**
20 A	**EZC100F3020**
25 A	**EZC100F3025**
30 A	**EZC100F3030**
32 A	**EZC100F3032**
40 A	**EZC100F3040**
45 A	**EZC100F3045**
50 A	**EZC100F3050**
60 A	**EZC100F3060**
63 A	**EZC100F3063**
75 A	**EZC100F3075**
80 A	**EZC100F3080**
100 A	**EZC100F3100**

EasyPact EZC100N 3P 15 kA 400/415 V

With thermal magnetic trip unit

DB116442.eps

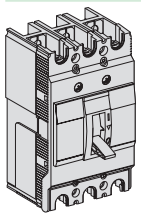

Rating	**3P** 3t
15 A	**EZC100N3015**
16 A	**EZC100N3016**
20 A	**EZC100N3020**
25 A	**EZC100N3025**
30 A	**EZC100N3030**
32 A	**EZC100N3032**
40 A	**EZC100N3040**
45 A	**EZC100N3045**
50 A	**EZC100N3050**
60 A	**EZC100N3060**
63 A	**EZC100N3063**
75 A	**EZC100N3075**
80 A	**EZC100N3080**
100 A	**EZC100N3100**

EasyPact EZC100H 3P 30 kA 400/415 V

With thermal magnetic trip unit

DB116442.eps

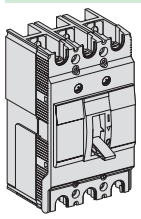

Rating	**3P** 3t
15 A	**EZC100H3015**
16 A	**EZC100H3016**
20 A	**EZC100H3020**
25 A	**EZC100H3025**
30 A	**EZC100H3030**
32 A	**EZC100H3032**
40 A	**EZC100H3040**
45 A	**EZC100H3045**
50 A	**EZC100H3050**
60 A	**EZC100H3060**
63 A	**EZC100H3063**
75 A	**EZC100H3075**
80 A	**EZC100H3080**
100 A	**EZC100H3100**

LVED212091EN.indb 3 16-4-13 下午4:13

EZC100N/H 4P
Circuit breaker

EasyPact EZC100N 4P 15 kA 400/415 V

With thermal magnetic trip unit

DB114620.eps

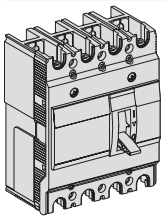

Rating	**4P** 3t
15 A	**EZC100N4015**
16 A	**EZC100N4016**
20 A	**EZC100N4020**
25 A	**EZC100N4025**
30 A	**EZC100N4030**
32 A	**EZC100N4032**
40 A	**EZC100N4040**
45 A	**EZC100N4045**
50 A	**EZC100N4050**
60 A	**EZC100N4060**
63 A	**EZC100N4063**
75 A	**EZC100N4075**
80 A	**EZC100N4080**
100 A	**EZC100N4100**

EasyPact EZC100H 4P 30 kA 400/415 V

With thermal magnetic trip unit

DB114620.eps

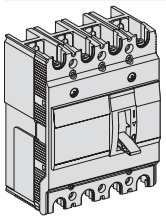

Rating	**4P** 3t
15 A	**EZC100H4015**
16 A	**EZC100H4016**
20 A	**EZC100H4020**
25 A	**EZC100H4025**
30 A	**EZC100H4030**
32 A	**EZC100H4032**
40 A	**EZC100H4040**
45 A	**EZC100H4045**
50 A	**EZC100H4050**
60 A	**EZC100H4060**
63 A	**EZC100H4063**
75 A	**EZC100H4075**
80 A	**EZC100H4080**
100 A	**EZC100H4100**

LVED212091EN.indb 4 16-4-13 下午4:13

EZC100N/H/B/F
Accessories

Connection accessories

Cable lugs

DB100821.eps

DB100822.eps

≤ 50 A	Cables from 2.5 to 16 mm²	Set of 2	**EZALUG0502**
		Set of 3	**EZALUG0503**
> 50 A	Cables from 10 to 50 mm²	Set of 2	**EZALUG1002**
		Set of 3	**EZALUG1003**

Spreaders

DB111674.eps

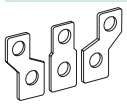

Spreaders for 3P breaker	Set of 3	**EZASPDR3P**
Spreaders for 4P breaker	Set of 4	**EZASPDR4P**

Terminal shields

DB100824.eps

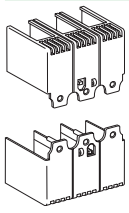

Terminal shields for 3P breaker	Set of 2	**EZATSHD3P**
Terminal shields for 4P breaker	Set of 2	**EZATSHD4P**

Phase barriers

DB100826.eps

Phase barriers	Set of 2	**EZAFASB2**

Electrical auxiliaries

Indication contacts

DB111662.eps

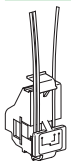

Auxiliary switch (AX)	**EZAUX10**

DB111663.eps

Alarm switch (AL)	**EZAUX01**

DB111669.eps

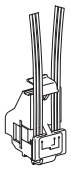

Auxiliary switch + alarm switch (AX + AL)	**EZAUX11**

LVED212091EN.indb 5 16-4-13 下午4:13

EZC100N/H/B/F (cont.)
Accessories (cont.)

Electrical auxiliaries (cont.)

Voltage releases

Db100830.eps

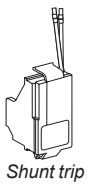

Shunt trip (SHT)

	Voltage	MX/SHT
AC	100-130 V	EZASHT100AC
	200-277 V	EZASHT200AC
	380-480 V	EZASHT380AC
DC	24 V	EZASHT024DC
	48 V	EZASHT048DC

Db100831.eps

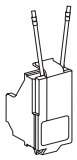

Under voltage release (UVR)

	Voltage	MN/UVR
AC	110-130 V	EZAUVR110AC
	200-240 V	EZAUVR200AC
	380-415 V	EZAUVR380AC
DC	24 V	EZAUVR024DC
	48 V	EZAUVR048DC

Rotary handles

Direct rotary handle (for 3/4P breaker)

Db100832.eps

Direct rotary handle (black)	EZAROTDS
Direct rotary handle (red/yellow)	EZAROTDSRY

Extended rotary handle (for 3/4P breaker)

Db100833.eps

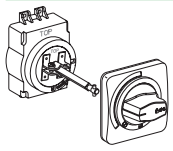

Extended rotary handle (black)	EZAROTE
Extended rotary handle (red/yellow)	EZAROTERY

Locks

Padlocking system

Db100834.eps

Padlocking system	EZALOCK

Installation accessory

DIN rail adaptor

Db100835.eps

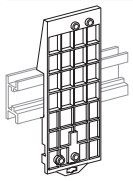

For 2 x 1P or 1 x 2P or 1 x 3P breaker	EZADINR
Note: for 4P breaker, use 2 adaptors	

Plug-in

Plug-in 100 A

DB127582.eps

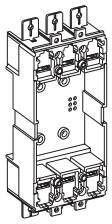

Kit, plug-in base 3P 15 A-50 A	EZAPLUG3L
Kit, plug-in base 3P 60 A-100 A	EZAPLUG3H
Fishbone connectors set of 3	EZAFSHB3
Plug-in connectors 15 A-50 A set of 2	EZAPCON1L
Plug-in connectors 60 A-100 A set of 2	EZAPCON1H

LVED212091EN.indb 6 16-4-13 下午4:13

EZC250F/N/H 2P/3P
Circuit breaker

EasyPact EZC250F 3P 18 kA 400/415 V

With thermal magnetic trip unit

DB111751.eps

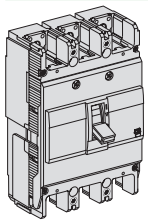

Rating	**3P** 3t
100 A	**EZC250F3100**
125 A	**EZC250F3125**
150 A	**EZC250F3150**
160 A	**EZC250F3160**
175 A	**EZC250F3175**
200 A	**EZC250F3200**
225 A	**EZC250F3225**
250 A	**EZC250F3250**

EasyPact EZC250N 3P 25 kA 400/415 V

With thermal magnetic trip unit

DB111751.eps

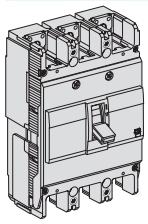

Rating	**3P** 3t
100 A	**EZC250N3100**
125 A	**EZC250N3125**
150 A	**EZC250N3150**
160 A	**EZC250N3160**
175 A	**EZC250N3175**
200 A	**EZC250N3200**
225 A	**EZC250N3225**
250 A	**EZC250N3250**

EasyPact EZC250H 2/3P 36 kA 400/415 V

With thermal magnetic trip unit

DB111751.eps

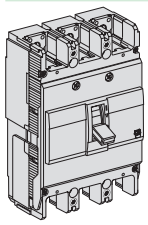

Rating	**2P** 2t	**3P** 3t
100 A	**EZC250H2100**	**EZC250H3100**
125 A	**EZC250H2125**	**EZC250H3125**
150 A	**EZC250H2150**	**EZC250H3150**
160 A	**EZC250H2160**	**EZC250H3160**
175 A	**EZC250H2175**	**EZC250H3175**
200 A	**EZC250H2200**	**EZC250H3200**
225 A	**EZC250H2225**	**EZC250H3225**
250 A	**EZC250H2250**	**EZC250H3250**

LVED212091EN.indb 7 16-4-13 下午4:13

EZC250N/H 4P
Circuit breaker

EasyPact EZC250N 4P 25 kA 400/415 V

With thermal magnetic trip unit

DB111666.eps

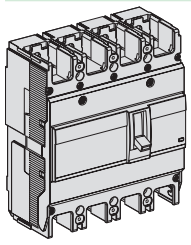

Rating	**4P** 3t	**4P** 4t
63 A	**EZC250N4063**	**EZC250N44063**
80 A	**EZC250N4080**	**EZC250N44080**
100 A	**EZC250N4100**	**EZC250N44100**
125 A	**EZC250N4125**	**EZC250N44125**
150 A	**EZC250N4150**	**EZC250N44150**
160 A	**EZC250N4160**	**EZC250N44160**
175 A	**EZC250N4175**	**EZC250N44175**
200 A	**EZC250N4200**	**EZC250N44200**
225 A	**EZC250N4225**	**EZC250N44225**
250 A	**EZC250N4250**	**EZC250N44250**

EasyPact EZC250H 4P 36 kA 400/415 V

With thermal magnetic trip unit

DB111666.eps

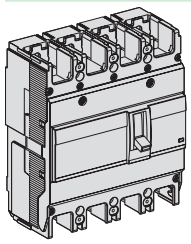

Rating	**4P** 3t	**4P** 4t
63 A	**EZC250H4063**	**EZC250H44063**
80 A	**EZC250H4080**	**EZC250H44080**
100 A	**EZC250H4100**	**EZC250H44100**
125 A	**EZC250H4125**	**EZC250H44125**
150 A	**EZC250H4150**	**EZC250H44150**
160 A	**EZC250H4160**	**EZC250H44160**
175 A	**EZC250H4175**	**EZC250H44175**
200 A	**EZC250H4200**	**EZC250H44200**
225 A	**EZC250H4225**	**EZC250H44225**
250 A	**EZC250H4250**	**EZC250H44250**

LVED212091EN.indb 8 16-4-13 下午4:13

EZCV250N/H 3P/4P
Earth-leakage circuit breaker

EasyPact EZCV250N 3P 25 kA 400/415 V

With thermal magnetic trip unit and earth leakage protection

DB111504.eps

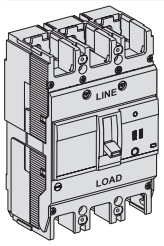

Rating	**3P** 3t
63 A	**EZCV250N3063**
80 A	**EZCV250N3080**
100 A	**EZCV250N3100**
125 A	**EZCV250N3125**
150 A	**EZCV250N3150**
160 A	**EZCV250N3160**
175 A	**EZCV250N3175**
200 A	**EZCV250N3200**
225 A	**EZCV250N3225**
250 A	**EZCV250N3250**

EasyPact EZCV250H 3P 36 kA 400/415 V

With thermal magnetic trip unit and earth leakage protection

DB111504.eps

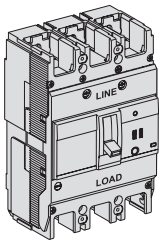

Rating	**3P** 3t
63 A	**EZCV250H3063**
80 A	**EZCV250H3080**
100 A	**EZCV250H3100**
125 A	**EZCV250H3125**
150 A	**EZCV250H3150**
160 A	**EZCV250H3160**
175 A	**EZCV250H3175**
200 A	**EZCV250H3200**
225 A	**EZCV250H3225**
250 A	**EZCV250H3250**

EasyPact EZCV250N 4P 25 kA 400/415 V

With thermal magnetic trip unit and earth leakage protection

DB111505.eps

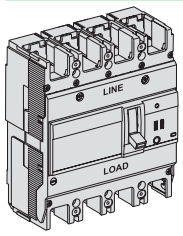

Rating	**4P** 3t	**4P** 4t
63 A	**EZCV250N4063**	**EZCV250N44063**
80 A	**EZCV250N4080**	**EZCV250N44080**
100 A	**EZCV250N4100**	**EZCV250N44100**
125 A	**EZCV250N4125**	**EZCV250N44125**
150 A	**EZCV250N4150**	**EZCV250N44150**
160 A	**EZCV250N4160**	**EZCV250N44160**
175 A	**EZCV250N4175**	**EZCV250N44175**
200 A	**EZCV250N4200**	**EZCV250N44200**
225 A	**EZCV250N4225**	**EZCV250N44225**
250 A	**EZCV250N4250**	**-**

EasyPact EZCV250H 4P 36 kA 400/415 V

With thermal magnetic trip unit and earth leakage protection

DB111505.eps

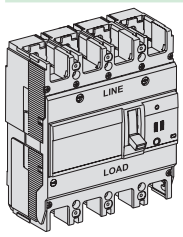

Rating	**4P** 3t	**4P** 4t
63 A	**EZCV250H4063**	**EZCV250H44063**
80 A	**EZCV250H4080**	**EZCV250H44080**
100 A	**EZCV250H4100**	**EZCV250H44100**
125 A	**EZCV250H4125**	**EZCV250H44125**
150 A	**EZCV250H4150**	**EZCV250H44150**
160 A	**EZCV250H4160**	**EZCV250H44160**
175 A	**EZCV250H4175**	**EZCV250H44175**
200 A	**EZCV250H4200**	**EZCV250H44200**
225 A	**EZCV250H4225**	**EZCV250H44225**
250 A	**EZCV250H4250**	**-**

LVED212091EN.indb 9
16-4-13 下午4:13

EZC250F/N/H, EZCV250N/H
Accessories

Connection accessories

Cable lugs

DB105209.eps

250 A	Cables from 42 to 152 mm²	Set of 3	**EZELUG2503**
		Set of 4	**EZELUG2504**

Terminal extensions

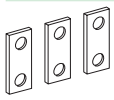
DB111752.eps

Terminal extension for 3P breaker	Set of 3	**EZETEX**
Terminal extension for 4P breaker	Set of 4	**EZETEX4P**

Spreaders

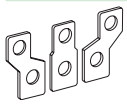
DB111674.eps

Spreaders for 3P breaker	Set of 3	**EZESPDR3P**
Spreaders for 4P breaker	Set of 4	**EZESPDR4P**

Terminal shields

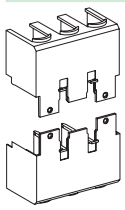
DB105210.eps

Terminal shields for 3P breaker (60 mm depth)	Set of 2	**EZETSHD3P**
Terminal shields for 3P breaker (68 mm depth)	Set of 2	**EZETSHD3PN**
Terminal shields for 4P breaker (68 mm depth)	Set of 2	**EZETSHD4PN**

Phase barriers

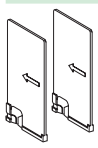
DB105211.eps

Phase barriers for 60 mm depth	Set of 2	**EZEFASB2**
Phase barriers for 68 mm depth	Set of 3	**EZEFASB3N**

Electrical auxiliaries

Indication contacts

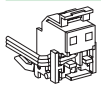
DB105212.eps

Auxiliary switch (AX)	**EZEAX**

DB105213.eps

Alarm switch (AL)	**EZEAL**

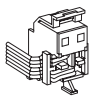
DB105214.eps

Auxiliary switch + alarm switch (AX + AL)	**EZEAXAL**

DB111667.eps

Earth-leakage alarm switch (ALV) (only for EZCV250)	**EZEALV**

LVED212091EN.indb 10 16-4-13 下午4:13

Electrical auxiliaries (cont.)

Voltage releases

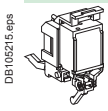
DB105215.eps

Shunt trip (SHT)

	Voltage	MX/SHT
AC	100-120 V	**EZESHT100AC**
	120-130 V	**EZESHT120AC**
	200-240 V	**EZESHT200AC**
	277 V	**EZESHT277AC**
	380-440 V	**EZESHT400AC**
	440-480 V	**EZESHT440AC**
DC	24 V	**EZESHT024DC**
	48 V	**EZESHT048DC**

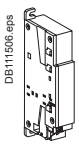
DB111506.eps

(UVR)

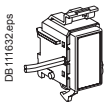
DB111632.eps

(UVRN)

Under voltage release

	Voltage	MN/UVR	MN/UVR (1)
AC	110-130 V	**EZEUVR110AC**	**EZEUVRN110AC**
	200-240 V	**EZEUVR200AC**	**EZEUVRN200AC**
	277 V	**EZEUVR277AC**	**EZEUVRN277AC**
	380-415 V	**EZEUVR400AC**	**EZEUVRN400AC**
	440-480 V	**EZEUVR440AC**	**EZEUVRN440AC**
DC	24 V	**EZEUVR024DC**	**EZEUVRN024DC**
	48 V	**EZEUVR048DC**	**EZEUVRN048DC**
	125 V	**EZEUVR125DC**	**EZEUVRN125DC**

***(1)** Only EZC250-4P and EZCV250-3/4P*

Rotary handles

Direct rotary handle

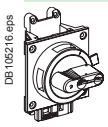
DB105216.eps

Direct rotary handle (black)	**EZEROTDS**
Direct rotary handle (red/yellow)	**EZEROTDSRY**

Extended rotary handle

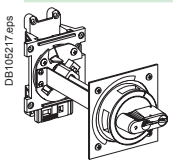
DB105217.eps

Extended rotary handle (black)	**EZEROTE**
Extended rotary handle (red/yellow)	**EZEROTERY**

Locks

Padlocking system

DB105218.eps

Padlocking system for EZC250-3P	**EZELOCK**
Padlocking system for EZC250-4P and EZCV250-3/4P	**EZELOCKN**

Plug-in

Plug-in 250 A

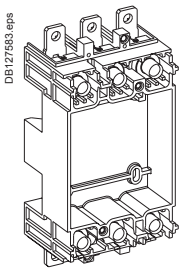
DB127583.eps

Kit, plug-in base 3P 100 A-250 A 60 mm breaker	**EZEPLUG3L**
Kit, plug-in base 3P 100 A-250 A 68 mm breaker	**EZEPLUG3H**
Kit, plug-in base 4P 100 A-250 A 68 mm breaker	**EZEPLUG4**
Kit, plug-in connectors 100 A-250 A set of 2	**EZEPCON1**

LVED212091EN.indb 11 16-4-13 下午4:13

EZC400N/H 3P/4P
Circuit breaker

EasyPact EZC400N 3P 36 kA 400/415 V
With thermal magnetic trip unit

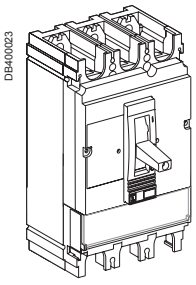

Rating	**3P** 3t
320 A	**EZC400N3320N**
350 A	**EZC400N3350N**
400 A	**EZC400N3400N**

EasyPact EZC400H 3P 50 kA 400/415 V
With thermal magnetic trip unit

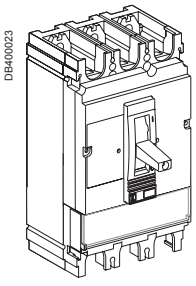

Rating	**3P** 3t
320 A	**EZC400H3320N**
350 A	**EZC400H3350N**
400 A	**EZC400H3400N**

EasyPact EZC400N 4P 36 kA 400/415 V
With thermal magnetic trip unit

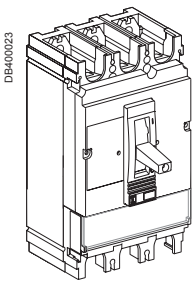

Rating	**4P** 3t	**4P** 4t
320 A	**EZC400N4320N**	**EZC400N44320N**
350 A	**EZC400N4350N**	**EZC400N44350N**
400 A	**EZC400N4400N**	**EZC400N44400N**

EasyPact EZC400H 4P 50 kA 400/415 V
With thermal magnetic trip unit

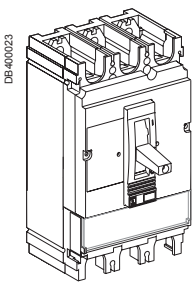

Rating	**4P** 3t	**4P** 4t
320 A	**EZC400H4320N**	**EZC400H44320N**
350 A	**EZC400H4350N**	**EZC400H44350N**
400 A	**EZC400H4400N**	**EZC400H44400N**

LVED212091EN.indb 12 16-4-13 下午4:13

EZC630N/H 3P/4P
Circuit breaker

EasyPact EZC630N 3P 36 kA 400/415 V
With thermal magnetic trip unit

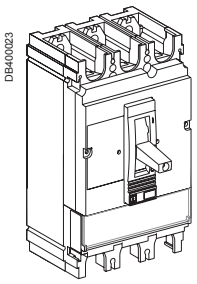

Rating	**3P** 3t
400 A	**EZC630N3400N**
500 A	**EZC630N3500N**
600 A	**EZC630N3600N**

EasyPact EZC630H 3P 50 kA 400/415 V
With thermal magnetic trip unit

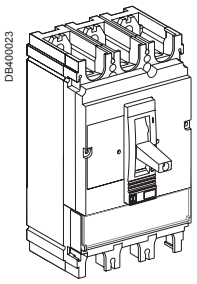

Rating	**3P** 3t
400 A	**EZC630H3400N**
500 A	**EZC630H3500N**
600 A	**EZC630H3600N**

EasyPact EZC630N 4P 36 kA 400/415 V
With thermal magnetic trip unit

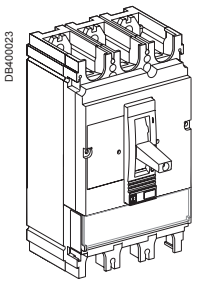

Rating	**4P** 3t	**4P** 4t
400 A	**EZC630N4400N**	**EZC630N44400N**
500 A	**EZC630N4500N**	**EZC630N44500N**
600 A	**EZC630N4600N**	**EZC630N44600N**

EasyPact EZC630H 4P 50 kA 400/415 V
With thermal magnetic trip unit

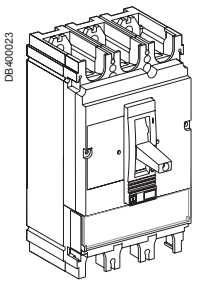

Rating	**4P** 3t	**4P** 4t
400 A	**EZC630H4400N**	**EZC630H44400N**
500 A	**EZC630H4500N**	**EZC630H44500N**
600 A	**EZC630H4600N**	**EZC630H44600N**

LVED212091EN.indb 13 16-4-13 下午4:13

EZC400/630N/H
Accessories

Connection accessories (Cu or Al)

Rear connections

DB112225

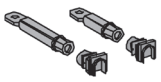

2 short		LV432475
2 long		LV432476

Cable connectors (1)

E22040

E22041

Aluminium connector 1x (35 to 300 mm²)	Set of 3	LV432479
	Set of 4	LV432480
Aluminium connector 2x (35 to 240 mm²)	Set of 3	LV432481
	Set of 4	LV432482
Voltage plug for aluminium connector 1 or 2 cables	Set of 10	LV429348

Terminal extension (1)

E21276

E21012

Right-angle terminal extension		Set of 3	LV432484
		Set of 4	LV432485
Edgewise terminal extensions		Set of 3	LV432486
		Set of 4	LV432487
Spreaders	52.5 mm	3P	LV432490
		4P	LV432491
	70 mm	3P	LV432492
		4P	LV432493

Crimp lugs for copper cable (1)

E18602

For cable 240 mm²	Set of 3	LV432500
	Set of 4	LV432501
For cable 300 mm²	Set of 3	LV432502
	Set of 4	LV432503

Supplied with 2 (or 3) interphase barriers

Crimp lugs for aluminium cable (1)

E30908

For cable 240 mm²	Set of 3	LV432504
	Set of 4	LV432505
For cable 300 mm²	Set of 3	LV432506
	Set of 4	LV432507

Supplied with 2 (or 3) interphase barriers

Insulation accessories

E18618

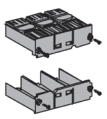

E18606

Short terminal shield, 45 mm (1 piece)	3P	LV432591
	4P	LV432592
Long terminal shield, 45 mm (1 piece)	3P	LV432593
	4P	LV432594
Interphase barriers	Set of 6	LV432570
Long terminal shiled for spreaders, 52,5mm (1 piece) (supplied with insulating plate)	3P	LV432595
	4P	LV432596
2 insulating screens (70 mm pitch)	3P	LV432578
	4P	LV432579

(1) supplied with 2 or 3 interphase barriers

LVED212091EN.indb 14 16-4-13 下午4:13

Electrical auxiliaries

Auxiliary contacts (changeover)

E18608

OF or SD or SDE or SDV	**29450**
OF or SD or SDE or SDV low level	**29452**
SDE adaptor mandatory for trip unit TM	**LV540050**

Voltage releases

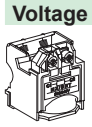
E18609

	Voltage	MX	MN
AC	24 V 50/60 Hz	**LV429384**	**LV429404**
	48 V 50/60 Hz	**LV429385**	**LV429405**
	110-130 V 50/60 Hz	**LV429386**	**LV429406**
	220-240 V 50/60 Hz and 208-277 V 60 Hz	**LV429387**	**LV429407**
	380-415 V 50 Hz and 440-480 V 60 Hz	**LV429388**	**LV429408**
DC	Voltage		
	12 V	**LV429382**	**LV429402**
	24 V	**LV429390**	**LV429410**
	30 V	**LV429391**	**LV429411**
	48 V	**LV429392**	**LV429412**
	60 V	**LV429383**	**LV429403**
	125 V	**LV429393**	**LV429413**
	250 V	**LV429394**	**LV429414**
MN 48 V 50/60 Hz with fixed time delay			
Composed of:	MN 48 V DC		**LV429412**
	Delay unit 48 V 50/60 Hz		**LV429426**
MN 220-240 V 50/60 Hz with fixed time delay			
Composed of:	MN 250 V DC		**LV429414**
	Delay unit 220-240 V 50/60 Hz		**LV429427**
MN 48 V DC/AC 50/60 Hz with adjustable time delay			
Composed of:	MN 48 V DC		**LV429412**
	Delay unit 48 V 50/60 Hz		**33680**
MN110-130 V DC/AC 50/60 Hz with adjustable time delay			
Composed of:	MN 125 V DC		**LV429413**
	Delay unit 110-130 V 50/60 Hz		**33681**
MN 220-250 V 50/60 Hz with adjustable time delay			
Composed of:	MN 250 V DC		**LV429414**
	Delay unit 220-250 V 50/60 Hz		**33682**

EZC400/630N/H (cont.)
Accessories (cont.)

Rotary handle

Direct rotary handle

E18611

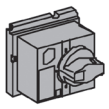

Standard black handle	**LV432597**

Extended rotary handle

E18612

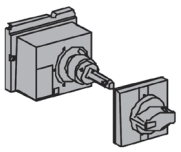

Standard extended rotary handle	**LV432598**

Locks

Toggle locking device for 1 to 3 padlocks

E18621

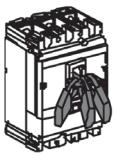

By removable device	**29370**

E18613

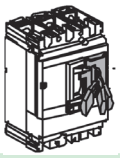

By fixed device	**32631**

Locking of the rotary handle

E18620

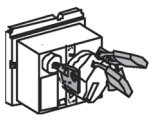

Keylock adaptor (keylock not included)		**LV432604**
Keylock (keylock adaptor not included)	Ronis 1351B.500	**41940**
	Profalux KS5 B24 D4Z	**42888**

LVED212091EN.indb 16 16-4-13 下午4:13

EasyPact EZC Busbar

Type-tested solution IEC 60439

Main Busbar

Main Busbar (EasyPact EZC 100/3P)	250 A	400 A	630 A
4 ways	EZB250W04	EZB400W04	EZB630W04
6 ways	EZB250W06	EZB400W06	EZB630W06
8 ways	EZB250W08	EZB400W08	EZB630W08
10 ways	EZB250W10	EZB400W10	EZB630W10
12 ways	EZB250W12	EZB400W12	EZB630W12

Db100836.eps

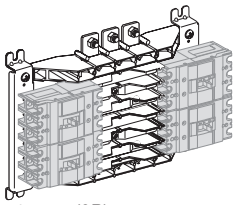

4 ways (3P)

Db100837.eps

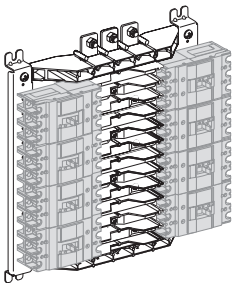

8 ways (3P)

Branch extension (EasyPact EZC/Compact NSX/NB)	
2 ways	EZBNS2
4 ways	EZBNS4

Db100838.eps

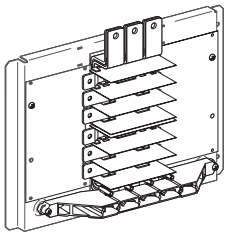

4 ways (3P)

Main incoming connections (Easypact EZC/Compact NSX/NB)

Main connectors	250 A	400 A	630 A
Main connectors	EZB250MCNS	EZB400MCNS	EZB630MCNS
To connect the main incomer to EasyPact EZC busbar (EasyPact EZC/Compact NSX/NB or INS switch)			

Db100839.eps

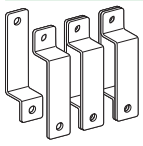

Mechanical lugs	250 A	400 A	630 A
Incoming cable size	**16-150 mm²**	**35-300 mm²**	**25-240 mm² 2 cables per phase**
Lug kit for bare incoming cables	EZB250MLUG	EZB400MLUG	EZB630MLUG

Db100840.eps

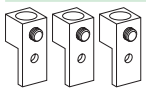

Connector caps		
Connector caps for 100 A out goings	Set of 3	EZB100CAP
Connector caps for 250 A out goings	Set of 3	EZB250CAP
To isolate connections when branch breaker not installed		

Db100841.eps

LVED212091EN.indb 17 16-4-13 下午4:13

Notes

LVED212091EN.indb 18 16-4-13 下午4:13

Schneider Electric Industries SAS
35, rue Joseph Monier
CS 30323
F- 92506 Rueil Malmaison Cedex France

RCS Nanterre 954 503 439
Capital social 896 313 776 €
www.schneider-electric.com

As standards, specifications and designs change from time to time, please ask for confirmation of the information given in this publication.

This document has been printed on ecological paper

Design: Schneider Electric
Photos: Schneider Electric
Printed:

© 2012 - Schneider Electric - All rights reserved.

LVED212091EN

04-2016

LVED212091EN.indb 8 16-4-13 下午4:11